ROCKY MOUNTAIN POWER
A DIVISION OF PACIFICORP

201 South Main, Suite 2300
Salt Lake City, Utah 84111

RECEIVED
2011 JAN 10 AM 9:39
IDAHO PUBLIC UTILITIES COMMISSION

January 8, 2011

PAC-E-11-01

VIA OVERNIGHT DELIVERY

Idaho Public Service Commission
472 W. Washington Street
P.O. Box 83720
Boise, Idaho 83720-0074

Attention: Jean D. Jewell
Commission Secretary

RE: In the Matter of the Applications of Rocky Mountain Power for Approval of Power Purchase Agreements Between Rocky Mountain Power and Cedar Creek Wind

Please find enclosed the original and seven (7) copies each of five separate Applications and Power Purchase Agreements between Rocky Mountain Power under which Cedar Creek would sell and Rocky Mountain Power would purchase electric energy generated from each of the five Cedar Creek Wind projects ("Projects") located in Bingham County, Idaho:

Project Name	Nameplate Capacity Megawatt (MW)	Monthly Average MW Delivery
Rattlesnake Canyon	27.6	9.4
Coyote Hill	27.6	9.4
North Point	27.6	9.8
Steep Ridge	25.2	9.8
Five Pine	25.2	9.4

Inquiries may be directed to Ted Weston, Idaho Regulatory Manager at (801) 220-2963, or Daniel Solander, Senior Counsel, at (801) 220-4010.

Very Truly Yours,

Jeffrey K. Larsen
Vice President, Regulation

Enclosures

RECEIVED

2011 JAN 10 AM 9:41

IDAHO PUBLIC
UTILITIES COMMISSION

PAC-E-11-01

PROJECT
RATTLESNAKE CANYON

Mark C. Moench
Daniel E. Solander
Yvonne R. Hogle
Rocky Mountain Power
201 South Main Street, Suite 2300
Salt Lake City, Utah 84111
Telephone: (801) 220-4014
Fax: (801) 220-3299
Email: mark.moench@pacificorp.com
daniel.solander@pacificorp.com
yvonne.hogle@pacificorp.com

Attorneys for Rocky Mountain Power

RECEIVED
2011 JAN 10 AM 9:41
IDAHO PUBLIC
UTILITIES COMMISSION

BEFORE THE IDAHO PUBLIC UTILITIES COMMISSION

IN THE MATTER OF THE APPLICATION OF ROCKY MOUNTAIN POWER FOR APPROVAL OF A POWER PURCHASE AGREEMENT BETWEEN RMP AND CEDAR CREEK WIND LLC	)	**CASE NO. PAC-E-11-01** **APPLICATION OF ROCKY MOUNTAIN POWER**

Comes now Rocky Mountain Power ("RMP" or "Company" or "PacifiCorp"), in accordance with RP 52 and the applicable provisions of the Public Utility Regulatory Policies Act of 1978 ("PURPA"), hereby respectfully applies to the Idaho Public Utilities Commission ("IPUC" or "Commission") for an Order accepting or rejecting the published avoided cost rate Power Purchase Agreement ("PPA") between RMP and Cedar Creek Wind LLC ("Cedar Creek" or "Seller') under which Cedar Creek would sell and RMP would purchase electric energy generated from each of the five Cedar Creek Wind projects ("Projects") located in Bingham County, Idaho:

Project Name	Nameplate Capacity Megawatt (MW)	Monthly Average MW Delivery
Rattlesnake Canyon	27.6	9.4
Coyote Hill	27.6	9.4
North Point	27.6	9.8
Steep Ridge	25.2	9.8
Five Pine	25.2	9.4

This application is specific to the **Rattlesnake Canyon** Project ("Facility"). In support of this Application RMP represents as follows:

1. Communications regarding this Application should be addressed to:

Ted Weston
201 South Main, Suite 2300
Salt Lake City, Utah 84111
Telephone: (801) 220-2963
Fax: (801) 220-2798
Email: ted.weston@pacificorp.com

and to:

Daniel E. Solander
201 South Main, Suite 2300
Salt Lake City, Utah 84111
Telephone: (801) 220-4014
Fax: (801) 220-3299
Email: daniel.solander@pacificorp.com

In addition, the Company respectfully requests that all data requests regarding this matter be addressed to one or more of the following:

By e-mail (**preferred**)	datarequest@pacificorp.com
By regular mail	Data Request Response Center PacifiCorp 825 NE Multnomah, Suite 2000 Portland, OR 97232

I. BACKGROUND

2. Sections 201 and 210 of PURPA, and pertinent regulations of the Federal Energy Regulatory Commission ("FERC"), require that regulated electric utilities purchase power produced by cogenerators or small power producers that obtain qualifying facility ("QF") status. The rate a QF receives for the sale of its power is generally referred to as the "avoided cost" rate and is to reflect the incremental cost to an electric utility of electric energy or capacity or both, which, but for the purchase from the QF, such utility would generate itself or purchase from another source. The Commission has authority under PURPA Sections 201 and 210 and the implementing regulations of the FERC, 18 C.F.R. § 292, to set avoided costs, to order electric utilities to enter into fixed-term obligations for the purchase of energy from QFs, and to implement FERC rules.

3. Cedar Creek proposes to design, construct, install, own, operate, and maintain a 27.6 megawatt ("MW") (Facility Capacity Rating) wind generating facility named Rattlesnake Canyon, to be located in Bingham County, Idaho. The Facility will be a QF under the applicable provisions of PURPA. The PPA for this Facility and the other four Cedar Creek projects; Coyote Hill, North Point, Steep Ridge, and Five Pine, are all executed by Scott Montgomery, President of Cedar Creek Wind LLC, being the authorized manager of each aforementioned Project.

4. On November 5, 2010, RMP along with Idaho Power and Avista Corporation filed a Joint Petition and Motion seeking a reduction in the published avoided cost rate eligibility cap from 10 aMW to 100 kilowatts ("kW"). Case No. GNR-E-10-04. On December 3, 2010, the Commission issued Order No. 32131 setting a

Modified Procedure comment schedule with which to develop a record for its decision regarding the Joint Petition and Motion's request to lower the published avoided cost rate eligibility cap. Comments were provided December 22, 2010, Reply Comments are due January 19, 2011, and Oral Arguments are scheduled for January 27, 2011. As part of the Order, the Commission ordered that its decision regarding whether to reduce the published avoided cost eligibility cap become effective on December 14, 2010.

5. RMP has an obligation under federal law, FERC regulations, and this Commission's Orders to enter into power purchase agreements with PURPA QFs. As stated in the Joint Petition filing, RMP has received multiple requests from PURPA wind QF developers for published avoided cost rate PPAs. The Company continues to process these requests as part of its normal course of business with the appropriate level of due diligence to ensure these potential resources comply with all PURPA regulations and Commission Orders and are submitted to this Commission for review and decision, as is its legal obligation. However, the request in this Application, the other four Applications for Cedar Creek Wind projects, as well as several other QF PPA Applications that will be filed over the course of the next several months, is made with the specific reservation of rights and incorporation of the averments set forth in the Joint Petition regarding the possible negative effects to the both the utility and its customers of additional and unfettered PURPA QF generation on system reliability, utility operations, and costs of incorporating and integrating such a large penetration level of PURPA wind QF generation into the utility's system.

6. RMP is concerned with the increase in power supply costs, and the resulting increase in rates to its customers, that the current published SAR-methodology avoided cost prices causes as compared to applying the IRP-methodology or the results from a competitive request for proposal solicitation. A non-standard QF project using the Commission Ordered IRP-methodology addresses the specific operating characteristics of the QF as part of the Company's resource portfolio, resulting in avoided cost prices tied to that specific resource and generally, at a lower cost than the SAR-derived avoided cost prices. The magnitude of standard wind QF project development in Idaho has reached monumental levels and at the current published avoided cost levels will have a significant impact on the net power cost portion of its Idaho and other jurisdiction customer's rates. The Rattlesnake Canyon QF Contract and the other four Cedar Creek Idaho wind QF contracts being submitted to the Commission total 133 MW, representing 30 percent of the 445 MW QFs that are currently requesting published avoided cost rate wind contracts. These proposed projects are not small family or community-based developers doing a single project, but rather large-scale, sophisticated developers with legal and technical assets who have disaggregated large projects into multiple projects in order to meet the 10 aMW threshold and qualify of published avoided cost contracts. Cedar Creek Wind originally submitted a bid into the Company's 2009R renewable Request for Proposal (RFP) as a single 151 MW project but did not make the RFP short-list of bids. In March 2010, Cedar Creek requested QF pricing for two 78 MW projects. The projects were priced using the IRP-methodology for large Idaho non-standard QFs. RMP prepared and delivered avoided cost prices which Cedar Creek rejected as not meeting their price threshold and therefore too low. In May 2010, Cedar Creek resubmitted five individual

QF projects totaling 133 MW for Idaho avoided cost pricing. The five projects, which share a common interconnection under the original single large project's interconnection agreement and have a single owner, complied with all PURPA's regulation including the 1-mile separation requirement, and met all Idaho rules and Commission Orders. Five published avoided cost contracts were prepared and executed. The Company points out that at the avoided cost price difference between the SAR-methodology compared to the IRP-methodology results in the Company paying an additional $10 million per year for the power from the five projects. Expanding these standard avoided cost prices to the other 312 MW of standard QF contract requests versus using the IRP-methodology would results in an additional cost of $23 million per year. In this instance, the published avoided cost prices are significantly higher than the avoided cost prices produced using the IRP-methodology. Further, standard purchases result in an inherent overpayment to the extent that the project does not offer the same delivery attributes as the proxy resource on which the avoided costs are calculated. As standard pricing becomes available to larger projects, for longer contract terms, the magnitude of this overpayment increases. Because a contract under the published QF rate has minimal flexibility to adjust pricing or the terms and conditions in the contract based on the project's characteristics, wind resources have found the QF path more conducive to gaining a long term power purchase agreement without the project specific adjustments they would encounter through the IRP-methodology or a competitive request for proposal solicitation. This divergence between applying the project specific characteristics through the IRP-methodology and the standard default pricing nature of the QF process will lead

to Idaho customers on the Company's system of carrying the burden of a higher-cost (i.e., above avoided cost) QF resource than they would otherwise pay for.

7. The Revised Protocol agreement addresses treatment of New QF Contracts under State Resources in Section C. as follows: "Costs associated with any New QF Contract, which exceeds the costs PacifiCorp would have otherwise incurred acquiring Comparable Resources, will be assigned on a situs basis to the State approving such contract." Therefore if the Commission approves this purchase power agreement the Company respectfully requests that the $10 million annual incremental expense associated with these five contracts be situs assigned to the state of Idaho. This would be in addition to Idaho's allocation of the cost produced by IRP-methodology valuation representative of the avoided cost RMP would have otherwise incurred acquiring these resources.

8. Rocky Mountain Power is concerned with the impact on its electrical system and reliability in adding the Cedar Creek Wind projects and other large volumes of QF wind. Historically the generation threshold for published avoided cost rates had been low, and the costs associated with capacity contribution and integration for an intermittent resource have been deemed to have minimal impact on the Company's electric system. With current thresholds in Idaho increased to 10aMW which equates to a wind QF project in the nameplate capacity range of 20 to 30MW, the cost to the Company and thus to the customer for integration, capacity contribution, and transmission capacity are of greater significance and need to be revisited in the determination of avoided costs for intermittent resources. In those cases where a resource is added in Idaho and there is insufficient load to absorb or use the generation, the added

QF power output must be moved elsewhere to be useful to the system and serve the Company's network load. This is primarily expected to be the case in the off-peak time period when customer loads are normally lower and cannot absorb the wind generation, but also may occur with the addition of significant numbers of 10 aMW QF projects or a small number of large QF projects. While the Company recognizes that locational transmission constraints and the need for transmission upgrades should not prevent project development, any incremental cost reflecting the constraint or upgrade should be borne by the developer and not the ratepayer. Analysis of transmission system constraints and the cost of options for dealing with those constraints should be incorporated into the QF pricing and contract process so that appropriate adjustments can be made.

9. Even though RMP is legally obligated to continue to negotiate, execute, and submit PURPA QF contracts for Commission review, it also feels obligated to reiterate that the continuing and unchecked requirement for the Company to acquire additional intermittent and other QF generation regardless of its need for additional energy or capacity on its system not only circumvents the Integrated Resource Planning process and creates system reliability and operational issues, but it also increases the price its customers must pay for their energy needs.

II. THE POWER PURCHASE AGREEMENT

10. On December 22, 2010, RMP and Cedar Creek entered into a PPA pursuant to the terms and conditions of the various Commission Orders applicable to this PURPA agreement for a wind resource. See Order Nos. 29632, 30423, 31021, and 31025. A copy of the PPA is attached to this Application as Attachment NO. 1. Under the terms of this PPA, Cedar Creek elected to contract with RMP for a 20-year term using the non-

levelized published avoided cost rates as currently established by the Commission for energy deliveries of less than 10 average megawatts ("aMW"). This PPA was executed by Cedar Creek on December 13, 2010. It was subsequently executed by RMP on December 22, 2010, and now filed for the Commission's review on January 7, 2011.

11. The nameplate rating of this Facility is 27.6 MW. Cedar Creek has attested and documented through its generation profile that the Facility will not exceed 10 aMW on a monthly basis. Furthermore, as described in Section 5.3 of the PPA, should the Facility exceed 10 aMW on a monthly basis, RMP will accept the energy that does not exceed the Maximum Facility Delivery Rate (Inadvertent Energy), but will not purchase or pay for this Inadvertent Energy.

12. This PURPA wind agreement includes the Mechanical Availability Guarantee ("MAG"), Wind Integration Cost adjustment, and Wind Forecasting cost sharing as required in Commission Order No. 30497. In addition, Cedar Creek and RMP have agreed to Delay Liquidated Damages and associated Delay Security provisions of $1,429,585 for the Rattlesnake Canyon project with return of the security as specific PPA milestones are met.

13. Cedar Creek has elected October 1, 2012, as the Scheduled Commercial Operation Date for this Facility. The PPA establishes numerous requirements in Section 2 that Cedar Creek must meet prior to RMP accepting energy deliveries from this Facility. Cedar Creek must deliver a monthly report on progress starting in October 2011 and RMP will monitor compliance with these initial requirements. In addition, RMP will monitor the ongoing contractual requirements through the full term of this PPA.

14. The PPA, as signed and submitted by the parties thereto, contains non-levelized published avoided cost rates in conformity with applicable IPUC Orders. In addition, Cedar Creek shall reimburse RMP for the cost of securing the network resource and transmission service request.

15. Cedar Creek's projects share a common collector substation for the five wind QF projects including Rattlesnake Canyon, which then delivers aggregated energy via a Cedar Creek owned 345-kV transmission line to the Point of Delivery at the Goshen Substation. This Facility and the other four Cedar Creek project's net output generation is individually metered at the collector substation and each PPA contains an Addendum L which distributes the line losses between the collector substation and the Point of Delivery to each project based on their percentage of the monthly net output to the aggregated delivery at the Point of Delivery.

16. The PPA provides that all applicable interconnection costs and monthly operational or maintenance charges as defined in the Generator Interconnection Agreement ("GIA") will be assessed to Seller. PURPA QF generation must be designated as a network resource ("NR") on RMP's system, which requires the Company's merchant function to submit a Transmission Service Request ("TSR") on behalf of the Facility to PacifiCorp Transmission. Submission of such request will occur by January 30, 2011. Upon resolution of any and all required upgrades, if necessary, to acquire network transmission capacity for this Facility's delivery of energy and upon execution of the PPA and the GIA, this Facility may then be designated as a network resource.

17. Seller has selected October 1, 2012, as the Scheduled Commercial Operation Date. Cedar Creek has been advised that it is Cedar Creek's responsibility to work with PacifiCorp Transmission to ensure that sufficient time and resources will be available to construct the interconnection facilities, and transmission upgrades if required, in time to allow the Facility to achieve the Scheduled Commercial Operation Date. Cedar Creek has been further advised that delays in the interconnection or transmission process are not Force Majuere events in achieving the Scheduled Commercial Operation Date and if Seller fails to achieve the Scheduled Commercial Operation Date at the times specified in the PPA, delay damages will be assessed.. Cedar Creek has advised RMP that is has been advised of and accepted the responsibility and risk associated with meeting the Schedule Commercial Operation Date requirements relating to interconnection and possible transmission upgrades.

18. Cedar Creek has also been made aware of and accepted the provisions of the PPA regarding curtailment or disconnection of its Facility should certain operating conditions develop on the Company's system. Section 6 of the PPA defines the conditions for curtailment and obligations of Cedar Creek in the event of curtailment.

19. Section 2.1 of the PPA provides that the PPA will not become effective until the Commission has approved all of the PPA's terms and conditions and issued a final and non-appealable order that declares that all payments RMP makes to Cedar Creek for purchases of energy will be allowed as prudent and legitimate expenses for ratemaking purposes and that Idaho will allow PacifiCorp to recover through its rates in Idaho any shortfall in recovery of power purchase costs under the PPA if any other public

utility commission with jurisdiction over PacifiCorp disallows recovery of any part of that state's proportionate share of said expenses.

III. MODIFIED PROCEDURE

20. RMP believes that a hearing is not necessary to consider the issues presented herein and respectfully requests that this Application be processed under Modified Procedure, i.e., by written submissions rather than by hearing. Reference Commission Rules of Procedure, IDAPA 31.01.01.201-204. If, however, the Commission determines that a technical hearing is required, the Company stands ready to prepare and present its testimony in such hearing.

WHEREFORE, Rocky Mountain Power respectfully requests that the Commission issue an Order accepting or rejecting the published avoided cost rate Power Purchase Agreement ("PPA") between RMP and Cedar Creek Wind LLC ("Cedar Creek" or "Seller') under which Cedar Creek would sell and RMP would purchase electric energy generated from the Rattlesnake Canyon facility.

Dated this 7th day of January, 2011

Respectfully submitted,

By Daniel Solander

Daniel E. Solander
Attorney for Rocky Mountain Power

RECEIVED
2011 JAN 10 AM 9:41
IDAHO PUBLIC
UTILITIES COMMISSION

POWER PURCHASE AGREEMENT

BETWEEN

CEDAR CREEK WIND, LLC

Relating to RATTLESNAKE CANYON, a Wind Turbine Generation Project

a non-fueled, on-system, Intermittent Resource with Mechanical Availability Guarantee, Idaho Qualifying Facility—10aMW/Month or less

AND

PACIFICORP

Section 1: Definitions 1
Section 2: Term, Commercial Operation Date 9
Section 3: Representations and Warranties 13
Section 4: Delivery of Power; Availability Guaranty 15
Section 5: Purchase Prices 17
Section 6: Operation and Control 20
Section 7: Motive Force 23
Section 8: Generation Forecasting Costs 23
Section 9: Metering; Reports and Records 24
Section 10: Billings, Computations and Payments 26
Section 11: Security 27
Section 12: Defaults and Remedies 28
Section 13: Indemnification; Liability 31
Section 14: Insurance 32
Section 15: Force Majeure 33
Section 16: Several Obligations 34
Section 17: Choice of Law 34
Section 18: Partial Invalidity 34
Section 19: Waiver 34
Section 20: Governmental Jurisdiction and Authorizations 34
Section 21: Successors and Assigns 35
Section 22: Entire Agreement 35
Section 23: Notices 35

POWER PURCHASE AGREEMENT

THIS POWER PURCHASE AGREEMENT, relating to RATTLESNAKE CANYON, a wind turbine generation project entered into this 22nd day of December, 2010, is between Cedar Creek Wind, LLC, a Delaware limited liability company (the **"Seller"**) and PacifiCorp, an Oregon corporation acting in its merchant function capacity (**"PacifiCorp"**). Seller and PacifiCorp are referred to collectively as the **"Parties"** and individually as a **"Party"**.

RECITALS

A. Seller intends to construct, own, operate and maintain a wind facility, including Seller's Interconnection Facilities, for the generation of electric power located in Bingham, County with an expected Facility Capacity Rating of 27,600-kilowatts (kW) as further described in **Exhibit A** and **Exhibit B** (**"Facility"**).

B. Seller has secured rights to deliver output from its Facility to PacifiCorp across interconnection facilities shared by five Qualifying Facilities (Coyote Hill, Five Pine, Steep Ridge, North Point, and Rattlesnake Canyon); the five Qualifying Facilities have agreed to allocate comingled line losses on those interconnection facilities as set forth in **Addendum L**.

C. Seller intends to operate the Facility as a Qualifying Facility, as such term is defined in Section 1.55 below, and to sell Net Output to PacifiCorp in Idaho.

D. Seller estimates that the average annual Net Output to be delivered by the Facility to PacifiCorp is 73,115,137 kilowatt-hours (kWh) (**"Average Annual Net Output"**) pursuant to the Initial Year Energy Delivery Schedule in Section 4.3.1, which amount of energy PacifiCorp will include in its resource planning.

E. Seller intends to sell and PacifiCorp intends to purchase all the Net Output from the Facility in accordance with the terms and conditions of this Agreement.

F. PacifiCorp intends to designate Seller's Facility as a Network Resource for the purposes of serving Network Load.

G. This Agreement is a "New QF Contract" under the PacifiCorp Inter-Jurisdictional Cost Allocation Revised Protocol.

H. Seller ☒ has [_] has not authorized Transmission Provider to release generation data to PacifiCorp. If yes, the authorization is attached as **Exhibit H**.

NOW, THEREFORE, the Parties mutually agree as follows:

SECTION 1: DEFINITIONS

When used in this Agreement, the following terms shall have the following meanings:

1.1 **"As-built Supplement"** shall be a supplement to **Exhibit A**, provided by Seller following completion of construction of the Facility, accurately describing the completed Facility.

1.2 **"Availability"** means, for any Billing Period, the ratio, expressed as a percentage, of (x) the aggregate sum of the turbine-minutes in which each of the Wind Turbines at the Facility was available to generate at the Maximum Facility Delivery Rate during the Billing Period over (y) the product of the number of Wind Turbines that comprise the Facility Capacity Rating as of Commercial Operation multiplied by the number of minutes in such Billing Period. A Wind Turbine shall be deemed not available to operate during minutes in which it is (a) in an emergency, stop, service mode or pause state; (b) in "run" status and faulted; or (c) otherwise not operational or capable of delivering at the Maximum Facility Delivery Rate to the Point of Delivery; unless if unavailable due solely to (i) a default by PacifiCorp; (ii) to the extent not caused by Seller's actions, a curtailment in accordance with Section 6.3 or (iii) insufficient wind (including the normal amount of time required by the generating equipment to resume operations following a period when wind speed is below the Cut-In Wind Speed).

1.3 **"Billing Period"** means the time period between PacifiCorp's reading of its power purchase meter at the Facility and for this Agreement shall coincide with calendar months.

1.4 **"Commercial Operation"** means that not less than the 90% of the expected Facility Capacity Rating is fully operational and reliable and the Facility is fully interconnected, fully integrated, and synchronized with the System, all of which shall be Seller's responsibility to receive or obtain, and which occurs when all of the following events (i) have occurred, and (ii) remain simultaneously true and accurate as of the date and moment on which Seller gives PacifiCorp notice that Commercial Operation has occurred:

1.4.1 PacifiCorp has received a certificate addressed to PacifiCorp from a Licensed Professional Engineer (a) stating the Facility Capacity Rating of the Facility at the anticipated time of Commercial Operation and (b) stating that the Facility is able to generate electric power reliably in amounts required by this Agreement and in accordance with all other terms and conditions of this Agreement.

1.4.2 Start-Up Testing of the Facility has been completed in accordance with **Exhibit E.**

1.4.3 PacifiCorp has received a certificate addressed to PacifiCorp from a Licensed Professional Engineer, an attorney in good standing in Idaho, or a letter from Transmission Provider, stating that, in accordance with the Generation Interconnection Agreement, all required interconnection facilities have been constructed, all required interconnection tests have been completed and the Facility is physically interconnected with the System in conformance with the Generation Interconnection Agreement and able to deliver energy consistent with the terms of this Agreement, and the Facility is fully integrated and synchronized with the System.

1.4.4 PacifiCorp has received a certificate addressed to PacifiCorp from a Licensed Professional Engineer, or an attorney in good standing in Idaho, stating that Seller has obtained all Required Facility Documents and, if requested by PacifiCorp in

writing, Seller shall have provided copies of any or all such requested Required Facility Documents.

1.4.5 Seller has complied with the security requirements of Section 11.

1.4.6 Network Resource Designation and Transmission Service Request. (i) PacifiCorp has received confirmation from the Transmission Provider that the Facility has been designated as a Network Resource and (ii) PacifiCorp has received confirmation from the Transmission Provider that the transmission service request has been granted in sufficient capacity to meet or exceed the Maximum Facility Delivery Rate and the Seller has paid all costs associated with any requirements of the transmission service request.

1.5 **"Commercial Operation Date"** means the date, as designated by PacifiCorp pursuant to Section 2.4, the Facility first achieves Commercial Operation.

1.6 **"Commission"** means the Idaho Public Utilities Commission.

1.7 **"Conforming Energy"** means all Net Energy except Non-Conforming Energy.

1.8 **"Conforming Energy Purchase Price"** means the applicable price for Conforming Energy and capacity, specified in Section 5.1.

1.9 **"Contract Year"** means a twelve (12) month period commencing at 00:00 hours Pacific Prevailing Time (**"PPT"**) on January 1 and ending on 24:00 hours PPT on December 31; *provided, however,* that the first Contract Year shall commence on the Commercial Operation Date and end on the next succeeding December 31, and the last Contract Year shall end on the Expiration Date, unless earlier terminated as provided herein.

1.10 **"Cut-in Wind Speed"** means the wind speed at which a stationary wind turbine begins producing Net Energy, as specified by the turbine manufacturer and set forth in **Exhibit A**.

1.11 **"Delay Liquidated Damages"**, **"Delay Daily Minimum"**, **"Delay Period"**, **"Delay Price"** and **"Delay Volume"** shall have the meanings set forth in Section 2.5 of this Agreement. **"Delay Security"** shall have the meaning set forth in Section 11.1.1 of this Agreement.

1.12 **"Default Security"** shall have the meaning set forth in Section 11.2 of this Agreement.

1.13 **"Effective Date"** shall have the meaning set forth in Section 2.1 of this Agreement.

1.14 **"Energy Delivery Schedule"** shall have the meaning set forth in Section 4.3 of this Agreement.

1.15 **"Environmental Attributes"** means any and all claims, credits, benefits, emissions reductions, offsets, and allowances, howsoever entitled, resulting from the avoidance of the emission of any gas, chemical, or other substance to the air, soil or water, which are deemed of value by PacifiCorp. Environmental Attributes include but are not limited to: (1) any avoided emissions of pollutants to the air, soil, or water such as (subject to the foregoing) sulfur oxides (SOx), nitrogen oxides (NOx), carbon monoxide (CO), and other pollutants; and (2) any avoided emissions of carbon dioxide (CO2), methane (CH4), and other greenhouse gases (GHGs) that have been determined by the United Nations Intergovernmental Panel on Climate Change to contribute to the actual or potential threat of altering the Earth's climate by trapping heat in the atmosphere. Environmental Attributes do not include (i) Production Tax Credits or certain other tax incentives existing now or in the future associated with the construction, ownership or operation of the Facility, (ii) matters designated by PacifiCorp as sources of liability, or (iii) adverse wildlife or environmental impacts.

1.16 **"Environmental Contamination"** means the introduction or presence of Hazardous Materials at such levels, quantities or location, or of such form or character, as to constitute a violation of federal, state or local laws or regulations, and present a material risk under federal, state or local laws and regulations that the Premises will not be available or usable for the purposes contemplated by this Agreement.

1.17 **"Expiration Date"** shall have the meaning set forth in Section 2.1 of this Agreement.

1.18 **"Facility"** is defined in Recital A of this Agreement.

1.19 **"Facility Capacity Rating"** means the sum of the Nameplate Capacity Ratings for all generators comprising the Facility.

1.20 **"Force Majeure"** has the meaning set forth in Section 15.1.

1.21 **"Forced Outage"** means an outage that requires removal of one or more Wind Turbines from service, another outage state or a reserve shutdown state before the end of the next weekend. Maintenance Outages and Planned Outages are not Forced Outages.

1.22 **"Generation Interconnection Agreement"** means the generation interconnection agreement entered into separately between Seller and Transmission Provider, as applicable, specifying the Point of Delivery and providing for the construction and operation of the Interconnection Facilities.

1.23 **"Governmental Authority"** means any supranational, federal, state or other political subdivision thereof, having jurisdiction over Seller, PacifiCorp or this Agreement, including any municipality, township or county, and any entity or body exercising executive, legislative, judicial, regulatory or administrative functions of or pertaining to government, including any corporation or other entity owned or controlled by any of the foregoing.

1.24 **"Hazardous Materials"** means any waste or other substance that is listed, defined, designated or classified as or determined to be hazardous under or pursuant to any environmental law or regulation.

1.25 **"Inadvertent Energy"** means: (1) energy delivered to the Point of Delivery in excess of the Maximum Monthly Purchase Obligation; and (2) energy delivered to the Point of Delivery at a rate exceeding the Maximum Facility Delivery Rate on an hour-averaged basis. Inadvertent Energy is not included in Net Energy.

1.26 **"Index Price"**, for each day, shall mean the weighted average of the average Peak and Off-Peak firm energy market prices, as published in the *Intercontinental Exchange (ICE) Day Ahead Power Price Report* for the Palo Verde Hub. For Sunday and NERC holidays, the 24-Hour Index Price shall be used, unless ICE shall publish a Firm On-Peak and Firm Off-Peak Price for such days for Palo Verde, in which event such indices shall be utilized for such days. If the ICE index or any replacement of that index ceases to be published during the term of this Agreement, PacifiCorp shall select as a replacement a substantially equivalent index that, after any appropriate or necessary adjustments, provides the most reasonable substitute for the index in question. PacifiCorp's selection shall be subject to Seller's consent, which Seller shall not unreasonably withhold, condition or delay.

1.27 **"Initial Year Energy Delivery Schedule"** shall have the meaning set forth in Section 4.3.1.

1.28 **"Interconnection Facilities"** means all the facilities and ancillary equipment used to interconnect the Facility to the System, as defined in the Generation Interconnection Agreement.

1.29 **"Letter of Credit"** means an irrevocable standby letter of credit in a form reasonably acceptable to PacifiCorp, naming PacifiCorp as the party entitled to demand payment and present draw requests thereunder. Such letter of credit shall be provided by an institution that is a United States office of a commercial bank or trust company organized under the laws of the United States of America or a political subdivision thereof, with a credit rating on its long-term senior unsecured debt of at least "A" from Standard & Poor's and "A2" from Moody's Investor Services, and (unless otherwise agreed) having assets of at least $10,000,000,000 (net of reserves).

1.30 **"Licensed Professional Engineer"** means a person acceptable to PacifiCorp in its reasonable judgment who is licensed to practice engineering in the state of Idaho, who has training and experience in the engineering discipline(s) relevant to the matters with respect to which such person is called to provide a certification, evaluation and/or opinion, who has no economic relationship, association, or nexus with the Seller, and who is not a representative of a consulting engineer, contractor, designer or other individual involved in the development of the Facility, or of a manufacturer or supplier of any equipment installed in the Facility. Such Licensed Professional Engineer shall be licensed in an appropriate engineering discipline for the required certification being made. The engagement and payment of a Licensed Professional Engineer solely to provide the certifications, evaluations and opinions required by

this Agreement shall not constitute a prohibited economic relationship, association or nexus with the Seller, so long as such engineer has no other economic relationship, association or nexus with the Seller.

1.31 **"Maintenance Outage"** means any outage of one or more Wind Turbines that is not a Forced Outage or a Planned Outage. A Maintenance Outage is an outage that can be deferred until after the end of the next weekend, but that requires that the Wind Turbine(s) be removed from service before the next Planned Outage. A Maintenance Outage may occur any time during the year and must have a flexible start date.

1.32 **"Material Adverse Change"** shall mean, with respect to the Seller, if the Seller has experienced a change in facts or circumstances related to development or operation of the Facility that materially and adversely impact Seller's ability to fulfill its obligations under this Agreement.

1.33 **"Maximum Facility Delivery Rate"** means the maximum instantaneous rate (kW) at which the Facility is capable of delivering Net Output at the Point of Delivery, as specified in **Exhibit A**, and in compliance with the Generation Interconnection Agreement.

1.34 **"Maximum GIA Delivery Rate"** means the maximum rate (kW) at which the Generator Interconnection Agreement allows the Facility to deliver energy to the Point of Delivery and is set forth in **Exhibit A**.

1.35 **"Maximum Monthly Purchase Obligation"** means the maximum amount of energy PacifiCorp is obligated to purchase under this Agreement in a calendar month. In accordance with Commission Order No. 29632, the Maximum Monthly Purchase Obligation for a given month, in kWh, shall equal 10,000 kW multiplied by the total number of hours in that month and prorated for any partial month; *provided however* that, subsequent to the Effective Date of this Agreement, any change by the Commission to the Maximum Monthly Purchase Obligation established by Order No. 29632 shall have no affect on the obligations of the Parties pursuant to this Agreement.

1.36 **"Nameplate Capacity Rating"** means the maximum instantaneous generating capacity of any qualifying small power or cogeneration generating unit supplying all or part of the energy sold by the Facility, expressed in MW or kW, when operated consistent with the manufacturer's recommended power factor and operating parameters, as set forth in a notice from Seller to PacifiCorp delivered before the Commercial Operation Date and, if applicable, updated in the As-built Supplement.

1.37 **"NERC"** means the North American Electric Reliability Corporation.

1.38 **"Net Energy"** means the energy component, in kWh, of Net Output. Net Energy does not include Inadvertent Energy.

1.39 **"Net Output"** means all energy and capacity produced by the Facility, less station use and less transformation and transmission losses and other adjustments, if any. For

purposes of calculating payment under this Agreement, Net Output of energy shall be calculated as set forth in **Addendum L**. Net Output does not include Inadvertent Energy.

1.40 "**Network Resource**" shall have the meaning set forth in the Tariff.

1.41 "**Network Service Provider**" means PacifiCorp Transmission, as a provider of network service to PacifiCorp under the Tariff.

1.42 "**Non-Conforming Energy**" means Net Output produced by the Facility prior to the Commercial Operation Date.

1.43 "**Non-Conforming Energy Purchase Price**" means the applicable price for Non-Conforming Energy and capacity, specified in Section 5.1.

1.44 "**Off-Peak Hours**" means all hours of the week that are not On-Peak Hours.

1.45 "**On-Peak Hours**" means hours from 6:00 a.m. to 10:00 p.m. Pacific Prevailing Time, Monday through Saturday, excluding Western Electricity Coordinating Council (WECC) and North American Electric Reliability Corporation (NERC) holidays.

1.46 "**Output Shortfall**" and "**Output Shortfall Damages**" shall have the meanings set forth in Section 4.5 of this Agreement.

1.47 "**PacifiCorp**" is defined in the first paragraph of this Agreement, and excludes PacifiCorp Transmission.

1.48 "**PacifiCorp Transmission**" means PacifiCorp, an Oregon corporation, acting in its interconnection and transmission function capacity.

1.49 "**Planned Outage**" means an outage of predetermined duration that is scheduled in Seller's Energy Delivery Schedule. Boiler overhauls, turbine overhauls or inspections are typical planned outages. Maintenance Outages and Forced Outages are not Planned Outages.

1.50 "**Point of Delivery**" means the point of interconnection between the Facility and the System, as specified in the Generation Interconnection Agreement and in **Exhibit B**.

1.51 "**Premises**" means the real property on which the Facility is or will be located, as more fully described on **Exhibit A**.

1.52 "**Prime Rate**" means the rate per annum equal to the publicly announced prime rate or reference rate for commercial loans to large businesses in effect from time to time quoted by JPMorgan Chase & Co. If a JPMorgan Chase & Co. prime rate is not available, the applicable Prime Rate shall be the announced prime rate or reference rate for commercial loans in effect from time to time quoted by a bank with $10 billion or more in assets in New York City, N.Y., selected by the Party to whom interest based on the prime rate is being paid.

1.53 **"Production Tax Credits"** means production tax credits under Section 45 of the Internal Revenue Code as in effect from time to time during the term hereof or any successor or other provision providing for a federal tax credit determined by reference to renewable electric energy produced from wind resources and any correlative state tax credit determined by reference to renewable electric energy produced from wind resources for which the Facility is eligible. Production Tax Credits do not include any tax credit determined by reference to investment.

1.54 **"Prudent Electrical Practices"** means any of the practices, methods and acts engaged in or approved by a significant portion of the electrical utility industry or any of the practices, methods or acts, which, in the exercise of reasonable judgment in the light of the facts known at the time a decision is made, could have been expected to accomplish the desired result at the lowest reasonable cost consistent with reliability, safety and expedition. Prudent Electrical Practices is not intended to be limited to the optimum practice, method or act to the exclusion of all others, but rather to be a spectrum of possible practices, methods or acts.

1.55 **"QF"** means **"Qualifying Facility"**, as that term is defined in the version of FERC Regulations (codified at 18 CFR Part 292) in effect on the date of this Agreement.

1.56 **"Required Facility Documents"** means all deeds, titles, leases (including Wind Leases), licenses, permits, authorizations, and agreements demonstrating that seller controls the necessary property rights and government authorizations to construct, operate, and maintain the Facility, including without limitation those set forth in **Exhibit C**.

1.57 **"Requirements of Law"** means any applicable and mandatory (but not merely advisory) federal, state and local law, statute, regulation, rule, code or ordinance enacted, adopted, issued or promulgated by any federal, state, local or other Governmental Authority or regulatory body (including those pertaining to electrical, building, zoning, environmental and occupational safety and health requirements).

1.58 **"Scheduled Commercial Operation Date"** means the date by which Seller promises to achieve Commercial Operation, as specified in Section 2.2.7.

1.59 **"Scheduled Monthly Energy Delivery"** means the Net Energy scheduled to be delivered during a given calendar month, as specified by Seller in the Energy Delivery Schedule.

1.60 **"Shared Interconnection Facilities"** means that portion of the Interconnection Facilities used by the Facility and one or more other Qualifying Facilities.

1.61 **"Seller's Forecast-Cost Share"** and **"Seller's Capped Forecast-Cost Share"** shall have the meanings set forth in Sections 8.2 and 8.3 respectively.

1.62 **"Subsequent Energy Delivery Schedule"** shall have the meaning set forth in Section 4.3.3.

1.63 **"System"** means the electric transmission substation and transmission or distribution facilities owned, operated or maintained by Transmission Provider, which shall include, after construction and installation of the Facility, the circuit reinforcements, extensions, and associated terminal facility reinforcements or additions required to interconnect the Facility, all as set forth in the Generation Interconnection Agreement.

1.64 **"Tariff"** means the PacifiCorp Transmission FERC Electric Tariff Seventh Revised Volume No.11 Pro Forma Open Access Transmission Tariff or the Transmission Provider's corresponding FERC tariff or both, as revised from time to time.

1.65 **"Transmission Provider"** means PacifiCorp Transmission or a successor, including any regional transmission organization (**"RTO"**).

1.66 **"Wind Leases"** means the memoranda of wind lease and redacted wind leases recorded in the county in which the Facility is located in connection with the development of the Facility, as the same may be supplemented, amended, extended, restated, or replaced from time to time.

1.67 **"Wind Turbine"** means a type SWT-2.3-101 Siemens 2,300 kilowatt wind turbine. At its full Facility Capacity Rating, the Facility will consist of 12 Wind Turbines.

SECTION 2: TERM, COMMERCIAL OPERATION DATE

2.1 This Agreement shall become effective after execution by both Parties and after approval by the Commission (**"Effective Date"**); *provided*, however, this Agreement shall not become effective until the Commission has determined, pursuant to a final and non-appealable order, that the prices to be paid for energy and capacity are just and reasonable, in the public interest, and that the costs incurred by PacifiCorp for purchases of capacity and energy from Seller are legitimate expenses, all of which the Commission will allow PacifiCorp to recover in rates in Idaho in the event other jurisdictions deny recovery of their proportionate share of said expenses.

Unless earlier terminated as provided herein, the Agreement shall remain in effect until 24:00 PPT **September 30, 2032** (**"Expiration Date"**).

2.2 Time is of the essence of this Agreement, and Seller's ability to meet certain requirements prior to the Commercial Operation Date and to achieve Commercial Operation by the Scheduled Commercial Operation Date is critically important. Therefore,

2.2.1 By September 30, 2011, Seller shall obtain and provide to PacifiCorp copies of all governmental permits and authorizations listed in **Exhibit C**.

2.2.2 By the date 30 calendar days after the Effective Date, Seller shall provide Delay Security required under Section 11.1.1, as applicable.

2.2.3 By June 30, 2011, Seller: (i) has provided all information and paid all fees the Transmission Provider requires to designate the Facility as a Network Resource in accordance with the Tariff (OATT); and (ii) has provided all information reasonably required by PacifiCorp to submit a transmission service request for the Facility to the Transmission Provider pursuant to the Tariff.

2.2.4 At least ten business days prior to delivery of any energy from the Facility to PacifiCorp, Seller shall provide PacifiCorp with an executed Generation Interconnection Agreement.

2.2.5 Prior to Commercial Operation Date, Seller shall provide Default Security required under Section 11.2, as applicable.

2.2.6 Prior to Commercial Operation Date, Seller shall provide PacifiCorp with an As-built Supplement reasonably acceptable to PacifiCorp.

2.2.7 By 00:00 PPT **October 1, 2012,** Seller shall achieve Commercial Operation (**"Scheduled Commercial Operation Date"**).

2.3 Beginning **October 1, 2011**, Seller shall provide PacifiCorp a one-page monthly update by e-mail on the progress of the milestones in Section 2.2.

2.4 Establishing Commercial Operation. Seller shall provide written notice to PacifiCorp stating when Seller believes that the Facility has achieved Commercial Operation. PacifiCorp shall have ten (10) business days after receipt either to confirm to Seller that all of the conditions to Commercial Operation have been satisfied or have occurred, or to state with specificity what PacifiCorp reasonably believes has not been satisfied. If, within such ten (10) business day period, PacifiCorp either does not respond or else confirms that the Facility has achieved Commercial Operation, the original date of receipt of Seller's notice shall be the Commercial Operation Date. If PacifiCorp notifies Seller within such ten (10) business day period that PacifiCorp reasonably believes the Facility has not achieved Commercial Operation, Seller may, if it has a good faith belief that Commercial Operation has been achieved, submit a Technical Dispute Notice, or else Seller shall address the concerns stated in PacifiCorp's notice to the mutual satisfaction of both Parties. If Seller submits a Technical Dispute Notice and the Technical Expert determines that Commercial Operation has been achieved, then the Commercial Operation Date shall be the date, as determined by the Technical Expert, that the Facility first met all the requirements of Commercial Operation; otherwise the date upon which Seller has addressed the concerns stated in PacifiCorp's notice to PacifiCorp's reasonable satisfaction, as specified in a notice from PacifiCorp to Seller, shall be the Commercial Operation Date. If Commercial Operation is achieved at less than one hundred percent (100%) of the expected Facility Capacity Rating and Seller informs PacifiCorp that Seller intends to bring the Facility to one hundred percent (100%) of the expected Facility Capacity Rating, Seller shall provide PacifiCorp with a list of all items to be completed in order to achieve the expected Facility Capacity Rating.

2.4.1 Technical Expert. If, and only if, a dispute regards (i) whether or not Commercial Operation has been achieved, and/or (ii) the date when Commercial Operation was achieved, the Parties may have such dispute, and only such dispute, resolved pursuant to this Section 2.4.1. Any such dispute will be determined by an independent technical expert, who shall be a mutually acceptable third party with training and experience in the disciplines relevant to the matters with respect to which such person is called upon to provide a certification, evaluation or opinion (the "**Technical Expert**"), which determination shall be (X) made (subject to the terms in this Section 2.4) in accordance with the Construction Industry Arbitration Rules and Mediation Procedures (Including Procedures for Large, Complex Construction Disputes) of the AAA, as amended and effective on October 1, 2009 (the "**Technical Dispute Procedures**"), notwithstanding any dollar amounts or dollar limitations contained therein, and (Y) binding upon the Parties.

(a) Either Party may commence the dispute process as to the matters set forth in paragraph 2.4.1, above, with the American Arbitration Association ("**AAA**") by notifying AAA and the other Party in writing ("**Technical Dispute Notice**") of such Party's desire that the dispute be resolved through a determination by a Technical Expert.

(b) The determination shall be conducted by a sole Technical Expert. The Parties may select any mutually acceptable Technical Expert. If the Parties cannot agree on a Technical Expert within five (5) days after the date of the Technical Dispute Notice, then the AAA's Arbitration Administrator shall send a list and resumes of three (3) available technical experts meeting the qualifications set forth in Section 2.4.1 to the Parties, each of whom shall strike one name, and the remaining person shall be appointed as the Technical Expert. If more than one name remains, either because one or both Parties have failed to respond to the AAA's Arbitration Administrator within five (5) days after receiving the list or because one or both Parties have failed to strike a name from the list or because both Parties strike the same name, the AAA's Arbitration Administrator will choose the Technical Expert from the remaining names. If the designated Technical Expert shall die, become incapable or, unwilling to, or unable to serve or proceed with the determination, a substitute Technical Expert shall be appointed in accordance with the selection procedure described above, and such substitute Technical Expert shall have all such powers as if he or she has been originally appointed herein.

(c) Within thirty (30) days of the appointment of the Technical Expert pursuant to the foregoing sub-section, each Party shall submit to the Technical Expert (and copy the other Party) a written report containing its position with respect to the dispute, and arguments therefor together with supporting documentation and calculations. Discovery shall be limited to Facility documentation relating to the disputed matter. Within sixty (60) days from receipt of such submissions, the Technical Expert shall select one or the other Party's position with respect to the disputed, arbitrate-able issues set forth in paragraph 2.4.1 above, whereupon such selection shall be a binding determination upon the

Parties for all purposes hereof. The costs of the Technical Expert, including his or her fees and expenses, shall be borne by the Party whose position was not selected by the Technical Expert; each Party shall otherwise bear its own expenses. If the Technical Expert fails to render a decision within ninety (90) days from receipt of each Party's submissions, either Party may, prior to the Technical Expert's final decision, initiate litigation, in which case the Technical Expert's final decision shall not be binding on the Parties unless otherwise agreed.

2.4.2 All verbal and written communications between the Parties and issued or prepared in connection with this Section 2.4.1 shall be deemed prepared and communicated in furtherance, and in the context, of dispute settlement, and shall be exempt from discovery and production, and shall not be admissible in evidence (whether as admission or otherwise) in any litigation or other proceedings for the resolution of the dispute. ,

2.4.3 All deadlines specified in this Section 2.4 may be extended by mutual agreement of the Parties.

2.5 Delay Damages. Seller shall cause the Facility to achieve Commercial Operation on or before the Scheduled Commercial Operation Date. If Commercial Operation occurs after the Scheduled Commercial Operation Date, Seller shall be liable to pay PacifiCorp delay damages for the number of days ("**Delay Period**") the Commercial Operation Date occurs after the Scheduled Commercial Operation Date, until the earlier of occurrence of the Commercial Operation Date or the termination of this Agreement ("**Delay Liquidated Damages**"), *provided that* Seller shall not accrue any Delay Liquidated Damages after: (i) Seller has timely achieved the milestone in Section 2.2.3; and (ii) Seller has satisfied all requirements of Commercial Operation except for one or more requirements in Section 1.4.6. Billings and payments for Delay Liquidated Damages shall be made in accordance with Section 11.1.

2.5.1 Delay Liquidated Damages. Delay Liquidated Damages equals the sum of: for each day in the Delay Period, the greater of (1) the Delay Daily Minimum or (2) the Delay Price times the Delay Volume

Where:

"**Delay Daily Minimum**" equals (a) for the first forty-five (45) calendar days following the Scheduled Commercial Operation Date: one-ninetieth (1/90th) of forty-five dollars ($45) multiplied by the Maximum Facility Delivery Rate with the Maximum Facility Delivery Rate being measured in kW; (b) after the forty-fifth (45th) calendar day following the Scheduled Commercial Operation date: the Delay Price times the Delay Volume.

"**Delay Price**" equals the positive difference, if any, of the Index Price minus the weighted average of the On-Peak and Off-Peak monthly Conforming Energy Purchase Prices; and

"**Delay Volume**" equals the applicable Scheduled Monthly Energy Delivery divided by the number of days in that month.

2.5.2 Appropriateness of Damages. The Parties agree that the damages PacifiCorp would incur due to delay in the Facility achieving Commercial Operation on or before the Scheduled Commercial Operation Date would be difficult or impossible to predict with certainty, and that the Delay Liquidated Damages are an appropriate approximation of such damages.

SECTION 3: REPRESENTATIONS AND WARRANTIES

3.1 PacifiCorp represents, covenants, and warrants to Seller that:

3.1.1 PacifiCorp is duly organized and validly existing under the laws of the State of Oregon.

3.1.2 PacifiCorp has the requisite corporate power and authority to enter into this Agreement and to perform according to the terms of this Agreement.

3.1.3 PacifiCorp has taken all corporate actions required to be taken by it to authorize the execution, delivery and performance of this Agreement and the consummation of the transactions contemplated hereby.

3.1.4 Subject to Commission approval, the execution and delivery of this Agreement does not contravene any provision of, or constitute a default under, any indenture, mortgage, or other material agreement binding on PacifiCorp or any valid order of any court, or any regulatory agency or other body having authority to which PacifiCorp is subject.

3.1.5 Subject to Commission approval, this Agreement is a valid and legally binding obligation of PacifiCorp, enforceable against PacifiCorp in accordance with its terms (except as the enforceability of this Agreement may be limited by bankruptcy, insolvency, bank moratorium or similar laws affecting creditors' rights generally and laws restricting the availability of equitable remedies and except as the enforceability of this Agreement may be subject to general principles of equity, whether or not such enforceability is considered in a proceeding at equity or in law).

3.2 Seller represents, covenants, and warrants to PacifiCorp that:

3.2.1 Seller is a limited liability company duly organized and validly existing under the laws of Delaware.

3.2.2 Seller has the requisite power and authority to enter into this Agreement and has, or will have at the date of Commercial Operation of the Facility, all requisite power and authority to perform according to the terms hereof, including all required regulatory authority to make wholesale sales from the Facility.

3.2.3 Seller's shareholders, directors, and officers have taken all actions required to authorize the execution, delivery and performance of this Agreement and the consummation of the transactions contemplated hereby.

3.2.4 The execution and delivery of this Agreement does not contravene any provision of, or constitute a default under, any indenture, mortgage, or other material agreement binding on Seller or any valid order of any court, or any regulatory agency or other body having authority to which Seller is subject.

3.2.5 This Agreement is a valid and legally binding obligation of Seller, enforceable against Seller in accordance with its terms (except as the enforceability of this Agreement may be limited by bankruptcy, insolvency, bank moratorium or similar laws affecting creditors' rights generally and laws restricting the availability of equitable remedies and except as the enforceability of this Agreement may be subject to general principles of equity, whether or not such enforceability is considered in a proceeding at equity or in law).

3.2.6 The Facility is and shall for the term of this Agreement continue to be a QF. Seller has provided the appropriate QF certification, which may include a Federal Energy Regulatory Commission self-certification to PacifiCorp prior to PacifiCorp's execution of this Agreement. At any time PacifiCorp has reason to believe during the term of this Agreement that Seller's status as a QF is in question, PacifiCorp may require Seller to provide PacifiCorp with a written legal opinion from an attorney in good standing in the state of Idaho and who has no economic relationship, association or nexus with the Seller or the Facility, stating that the Facility is a QF and providing sufficient proof (including copies of all documents and data as PacifiCorp may request) demonstrating that Seller has maintained and will continue to maintain the Facility as a QF.

3.2.7 Neither the Seller nor any of its principal equity owners is or has within the past two (2) years been the debtor in any bankruptcy proceeding, is unable to pay its bills in the ordinary course of its business, or is the subject of any legal or regulatory action, the result of which could reasonably be expected to impair Seller's ability to own and operate the Facility in accordance with the terms of this Agreement.

3.2.8 Seller has not at any time defaulted in any of its payment obligations for electricity purchased from PacifiCorp.

3.2.9 Seller is not in default under any of its other material agreements that would result in Seller's failure to perform its material obligations hereunder.

3.2.10 Seller owns all right, title and interest in and to the Facility, free and clear of all liens and encumbrances other than liens and encumbrances related to third-party financing of the Facility, and Seller (or its successor in interest) will continue to own for the term of this Agreement, all right, title and interest in and to the Facility,

free and clear of all liens and encumbrances other than liens and encumbrances related to third-party financing of the Facility.

3.2.11 In entering into this Agreement and the undertaking by Seller of the obligations set forth herein, Seller has investigated and determined that it is capable of performing hereunder and has not relied upon the advice, experience or expertise of PacifiCorp in connection with the transactions contemplated by this Agreement.

3.2.12 All professionals or experts including, but not limited to, engineers, attorneys or accountants, that Seller may have consulted or relied on in undertaking the transactions contemplated by this Agreement have been solely those of Seller.

3.2.13 All leases of real property required for the operation of the Facility or the performance of any obligations of Seller hereunder are set forth and accurately described in **Exhibit C**. Upon request by PacifiCorp, Seller shall provide copies of the Wind Leases to PacifiCorp.

3.2.14 All information about the Facility set forth in **Exhibit A**, **Exhibit B**, and **Exhibit C** has been verified by Seller and is accurate to the best of its knowledge.

3.3 Notice. If at any time during this Agreement, any Party obtains actual knowledge of any event or information which would have caused any of the representations and warranties in this Section 3 to have been materially untrue or misleading when made, such Party shall provide the other Party with written notice of the event or information, the representations and warranties affected, and the action, if any, which such Party intends to take to make the representations and warranties true and correct. The notice required pursuant to this Section shall be given as soon as practicable after the occurrence of each such event.

SECTION 4: DELIVERY OF POWER; AVAILABILITY GUARANTY

4.1 Delivery and Acceptance of Net Output. Except for any curtailment specified in Section 6.3, unless otherwise provided herein, PacifiCorp will purchase and Seller will sell all Net Output from the Facility.

4.2 No Sales to Third Parties. During the term of this Agreement, Seller shall not sell any Net Output from the Facility to any entity other than PacifiCorp.

4.3 Energy Delivery Schedule. Seller shall prepare and provide to PacifiCorp, on an ongoing basis, a written schedule of Net Energy expected to be delivered by the Facility (**"Energy Delivery Schedule"**), in accordance with the following:

4.3.1 During the first twelve full calendar months following the Commercial Operation Date, Seller predicts that the Facility will produce and deliver the following monthly amounts (**"Initial Year Energy Delivery Schedule"**):

Month	Energy Delivery (kWh)	Avg. kW
January	6,285,415	8,448
February	5,669,415	8,437
March	6,236,024	8,382
April	5,700,174	7,917
May	5,553,040	7,464
June	5,796,677	8,051
July	5,716,795	7,684
August	6,333,199	8,512
September	6,112,516	8,490
October	6,163,807	8,285
November	6,753,219	9,379
December	6,794,856	9,133
TOTAL:	73,115,137	8,346

4.3.2 Seller may revise the Initial Year Energy Delivery Schedule any time prior to the Commercial Operation Date.

4.3.3 Beginning at the end of the ninth full calendar month of operation, and at the end of every third month thereafter, Seller shall supplement the Energy Delivery Schedule with three additional months of forward estimates (which shall be appended to this Agreement using the format specified in **Exhibit D**) ("**Subsequent Energy Delivery Schedule**"), such that the Energy Delivery Schedule will provide at least three months of scheduled energy estimates at all times. Seller shall provide Subsequent Energy Delivery Schedules no later than 5:00 pm PPT of the 5th day after the due date. If Seller does not provide a Subsequent Energy Delivery Schedule by the above deadline, scheduled energy for the omitted period shall equal the amounts scheduled by Seller for the same three-month period during the previous year.

4.3.4 Upon and after the Commercial Operation Date, Seller may no longer revise the Energy Delivery Schedule for the first six full calendar months of Commercial Operation. After 5:00 p.m. PPT of the fifth business day following the end of the third full calendar month of Commercial Operation and the end of each third calendar month thereafter, Seller may no longer revise the Energy Delivery Schedule for the six calendar months immediately following such third month. Subject to the foregoing restrictions in this Section 4.3.4, Seller may revise the Energy Delivery Schedule for any unrestricted month by providing written notice to PacifiCorp. Failure to provide timely written notice of changed amounts will be deemed to be an election of no change.

4.4 Minimum Availability Obligation. Seller shall cause the Facility to achieve an Availability of at least 85% during each month ("**Guaranteed Availability**").

4.5 Liquidated Damages for Output Shortfall. If the Availability in any given month falls below the Guaranteed Availability, the resulting shortfall shall be expressed in kWh as the "**Output Shortfall.**" The Output Shortfall shall be calculated in accordance with the following formula:

Output Shortfall = (Guaranteed Availability – Availability) * Scheduled Monthly Energy Delivery

Seller shall pay PacifiCorp for any Output Shortfall at the lower of (1) the positive difference, if any, of the Index Price minus the weighted average of the On-Peak and Off-Peak monthly Conforming Energy Purchase Prices; or (2) the weighted average of the On-Peak and Off-Peak monthly Conforming Energy Purchase Prices ("**Output Shortfall Damages**").

Output Shortfall Damages = Output Shortfall * Output Shortfall Price

Where:

Output Shortfall Price = (Index Price – Weighted Average CEPP), except that if Output Shortfall Price < 0, then Output Shortfall Price = 0, and except that if Output Shortfall Price > Weighted Average CEPP, then Output Shortfall Price = Weighted Average CEPP

Weighted Average CEPP = the weighted average On-Peak and Off-Peak Conforming Energy Purchase Prices for the month of Output Shortfall

If an Output Shortfall occurs in any given month, Seller may owe PacifiCorp liquidated damages. Each Party agrees and acknowledges that (a) the damages that PacifiCorp would incur due to the Facility's failure to achieve the Guaranteed Availability would be difficult or impossible to predict with certainty, and (b) the liquidated damages contemplated in this Section 4.5 are a fair and reasonable calculation of such damages.

4.6 Audit Rights. In addition to data provided under Sections 9.3 and 9.4, PacifiCorp shall have the right, but not the obligation, to audit the Facility's compliance with its Guaranteed Availability using any reasonable methods. Seller agrees to retain all performance related data for the Facility for a minimum of three years, and to cooperate with PacifiCorp in the event PacifiCorp decides to audit such data.

SECTION 5: PURCHASE PRICES

5.1 Energy Purchase Price. Except as provided in Section 5.3, PacifiCorp will pay Seller Conforming Energy or Non-Conforming Energy Purchase Prices for Net Output

adjusted for the month and On-Peak Hours or Off-Peak Hours and the wind integration cost using the following formulae, in accordance with Commission Order Nos. 30423, 31025, and 31021:

Conforming Energy Purchase Price $= (AR_{ce} * MPM) - WIC$

Non-Conforming Energy Purchase Price $= (AR_{nce} * MPM) - WIC$

Where:

AR_{ce} = Conforming Energy annual rate from Table 1, below, for the year of the Net Output.

AR_{nce} = *the lower of*:

85% of the Conforming Energy annual rate from Table 1 below, for the year of Net Output

or

85% of average of the daily Index Price for each day of the month, or portion of month, of Net Output.

MPM = monthly On-Peak or Off-Peak multiplier from Table 2, below, that corresponds to the month of the Net Output and whether the Net Output occurred during On-Peak Hours or Off-Peak Hours.

WIC = $6.50/MWh, the wind integration cost prescribed in Commission Order No. 31021.

Example calculations are provided in **Exhibit G**.

Table 1: Conforming Energy Annual Rates (from Commission Order No. 31025)

Year	Conforming Energy Annual Rate (AR_{ce}) $/MWh
2012	63.97
2013	67.51
2014	71.32
2015	75.40
2016	77.76
2017	80.07
2018	82.58
2019	85.05
2020	87.61
2021	90.63
2022	93.78
2023	97.05
2024	100.44
2025	103.98
2026	106.98
2027	110.07

2028	113.26
2029	116.56
2030	119.95
2031	124.51
2032	128.50

Table 2: Monthly On-Peak/Off-Peak Multipliers

Month	On-Peak Hours	Off-Peak Hours
January	103%	94%
February	105%	97%
March	95%	80%
April	95%	76%
May	92%	63%
June	94%	65%
July	121%	92%
August	121%	106%
September	109%	99%
October	115%	105%
November	110%	96%
December	129%	120%

5.2 Payment.

For each Billing Period in each Contract Year, PacifiCorp shall pay Seller as follows:

For delivery of Conforming Energy:

$$\text{Payment} = (\text{CEnergy}_{\text{On-Peak}} * \text{CEPPrice}_{\text{On-Peak}} / 1000) + (\text{CEnergy}_{\text{Off-Peak}} * \text{CEPPrice}_{\text{Off-Peak}} / 1000)$$

For delivery of Non-Conforming Energy:

$$\text{Payment} = (\text{NCEnergy}_{\text{On-Peak}} * \text{NCEPPrice}_{\text{On-Peak}} / 1000) + (\text{NCEnergy}_{\text{Off-Peak}} * \text{NCEPPrice}_{\text{Off-Peak}} / 1000)$$

Where:

CEnergy	=	Conforming Energy in kWh
CEPPrice	=	Conforming Energy Purchase Price in $/MWh
NCEnergy	=	Non-Conforming Energy in kWh
NCEPPrice	=	Non-Conforming Energy Purchase Price in $/MWh
On-Peak	=	the corresponding value for On-Peak Hours
Off-Peak	=	the corresponding value for Off-Peak Hours

5.3 Inadvertent Energy. So long as acceptance of Inadvertent Energy does not cause PacifiCorp to violate the terms of its Network Transmission Service and is consistent

with Prudent Electrical Practices, PacifiCorp will accept Inadvertent Energy, but will not purchase or pay for Inadvertent Energy.

SECTION 6: OPERATION AND CONTROL

6.1 As-Built Supplement. Upon completion of any construction affecting the Facility, Seller shall provide PacifiCorp an As-built Supplement bearing the stamp of a Licensed Professional Engineer that accurately depicts the Facility as built. The As-built Supplement must be reviewed and approved by PacifiCorp, which approval shall not unreasonably be withheld, conditioned or delayed.

6.2 Operation. Seller shall operate and maintain the Facility in a safe manner in accordance with the Generation Interconnection Agreement, Prudent Electrical Practices and in accordance with the requirements of all applicable federal, state and local laws and the National Electric Safety Code as such laws and code may be amended from time to time. PacifiCorp shall have no obligation to purchase Net Output from the Facility to the extent the interconnection between the Facility and PacifiCorp's electric system is disconnected, suspended or interrupted, in whole or in part, pursuant to the Generation Interconnection Agreement, or to the extent generation curtailment is required as a result of Seller's non-compliance with the Generation Interconnection Agreement. PacifiCorp shall have the right to inspect the Facility to confirm that Seller is operating the Facility in accordance with the provisions of this Section 6 upon reasonable notice to Seller. Seller is solely responsible for the operation and maintenance of the Facility. PacifiCorp shall not, by reason of its decision to inspect or not to inspect the Facility, or by any action or inaction taken with respect to any such inspection, assume or be held responsible for any liability or occurrence arising from the operation and maintenance by Seller of the Facility.

6.3 Curtailment. PacifiCorp shall not be obligated to purchase, receive, pay for, or pay any damages associated with, Net Output (or associated Production Tax Credits or Environmental Attributes) if such Net Output (or associated Production Tax Credits or Environmental Attributes) is not delivered to the System or Point of Delivery due to any of the following: (a) the interconnection between the Facility and the System is disconnected, suspended or interrupted, in whole or in part, consistent with the terms of the Generation Interconnection Agreement, (b) the Transmission Provider or Network Service Provider directs a general curtailment, reduction, or redispatch of generation in the area, (which would include the Net Output) for any reason, even if such curtailment or redispatch directive is carried out by PacifiCorp, which may fulfill such directive by acting in its sole discretion; or if PacifiCorp curtails or otherwise reduces the Net Output in order to meet its obligations to the Transmission Provider or Network Service Provider to operate within system limitations, (c) the Facility's Output is not received because the Facility is not fully integrated or synchronized with the System, or (d) an event of Force Majeure prevents either Party from delivering or receiving Net Output. Seller shall reasonably determine the MWh amount of Net Output curtailed pursuant to this Section 6.3 after the fact based on the amount of energy that could have been generated at the Facility and delivered to PacifiCorp as Net Output but that was not generated and delivered because of the curtailment. Seller shall determine the quantity of such

curtailed energy based on (x) the time and duration of the curtailment period and (y) wind conditions recorded at the Facility during the period of curtailment and the power curve specified for the for the Wind Turbines as shown in **Exhibit A**. Seller shall promptly provide PacifiCorp with access to such information and data as PacifiCorp may reasonably require to confirm to its reasonable satisfaction the amount of energy that was not generated or delivered because of a curtailment described in this Section 6.3.

6.4 PacifiCorp as Merchant. Seller acknowledges that PacifiCorp, acting in its merchant capacity function as purchaser under this Agreement, has no responsibility for or control over PacifiCorp Transmission or any successor Transmission Provider.

6.5 Outages.

6.5.1 Planned Outages. Except as otherwise provided herein, Seller shall not schedule Planned Outage during any portion of the months of November, December, January, February, June, July, and August, except to the extent a Planned Outage is reasonably required to enable a vendor to satisfy a guarantee requirement in a situation in which the vendor is not otherwise able to perform the guarantee work at a time other than during one of the months specified above. Seller shall, in **Exhibit D**, provide PacifiCorp with an annual forecast of Planned Outages for each Contract Year at least one (1) month, but no more that three (3) months, before the first day of that Contract Year, and shall promptly update such schedule, or otherwise change it only, to the extent that Seller is reasonably required to change it in order to comply with Prudent Electrical Practices. Seller shall not schedule more than one hundred fifty (150) hours of Planned Outages for each calendar year. Seller shall notify PacifiCorp of any deviation to the annual Planned Outage schedule, above, on the Monday preceding the scheduling week in which the sooner of the following will occur: (a) the outage as predicted in the Planned Outage schedule; or (b) the outage per Seller's revised plans. Such notice shall consist of a Monday-Sunday, hourly spreadsheet showing the revised total Facility curtailment (MW) for that scheduling week. Seller shall not schedule any maintenance of Shared Interconnection Facilities during November, December, January, February, June, July, or August, without the prior written approval of PacifiCorp, which approval may be reasonably withheld by PacifiCorp.

6.5.2 Maintenance Outages. If Seller reasonably determines that it is necessary to schedule a Maintenance Outage, Seller shall notify PacifiCorp of the proposed Maintenance Outage as soon as practicable but in any event at least five (5) days before the outage begins (or such shorter period to which PacifiCorp may reasonably consent in light of then existing wind conditions). Upon such notice, the Parties shall plan the Maintenance Outage to mutually accommodate the reasonable requirements of Seller and the service obligations of PacifiCorp. Seller shall take all reasonable measures and use commercially reasonable efforts consistent with Prudent Electrical Practices to not schedule any Maintenance Outage during the following periods: June 15 through June 30, July, August, and September 1 through September 15. Seller shall include in such notice of a proposed Maintenance Outage the expected

start date and time of the outage, the amount of generation capacity of the Facility that will not be available, and the expected completion date and time of the outage. Seller may provide notices under this Section 6.5.2 orally. Seller shall confirm any such oral notification in writing as soon as practicable. PacifiCorp shall promptly respond to such notice and may request reasonable modifications in the schedule for the outage. Seller shall use all reasonable efforts to comply with PacifiCorp's request to modify the schedule for a Maintenance Outage if such modification has no substantial impact on Seller. Seller shall notify PacifiCorp of any subsequent changes in generation capacity of the Facility during such Maintenance Outage and any changes in the Maintenance Outage completion date and time. Seller shall take all reasonable measures and exercise its best efforts consistent with Prudent Electrical Practices to minimize the frequency and duration of Maintenance Outages.

6.5.3 Forced Outages. Seller shall promptly provide to PacifiCorp an oral report, via telephone to a number specified by PacifiCorp, of any Forced Outage of the Facility. Such report shall include the amount of generation capacity of the Facility that will not be available because of the Forced Outage and the expected return date and time of such generation capacity. Seller shall promptly update the report as necessary to advise PacifiCorp of changed circumstances. If the Forced Outage resulted in more than 15% of the Facility Capacity Rating of the Facility being unavailable, Seller shall confirm the oral report in writing as soon as practicable. Seller shall take all reasonable measures and exercise its best efforts consistent with Prudent Electrical Practices to avoid Forced Outages and to minimize their duration.

6.5.4 Notice of Deratings and Outages. Without limiting other notice requirements, Seller shall notify PacifiCorp, via telephone or via electronic mail, to a number or email address specified by PacifiCorp, of any limitation, restriction, derating or outage known to Seller that affects the generation capacity of the Facility in an amount greater than five percent (5%) of the Facility Capacity Rating for the following day. Seller shall promptly update such notice to reflect any material changes to the information in such notice.

6.5.5 Effect of Outages on Estimated Output. Seller shall factor Planned Outages and Maintenance Outages that Seller reasonably expects to encounter in the ordinary course of operating the Facility into the Scheduled Monthly Energy Delivery amounts in the Energy Delivery Schedule set forth in **Exhibit D**.

6.6 Scheduling.

6.6.1 Cooperation and Standards. With respect to any and all scheduling requirements in this Agreement, (a) Seller shall cooperate with PacifiCorp with respect to scheduling Net Output, and (b) each Party shall designate authorized representatives to communicate with regard to scheduling and related matters arising hereunder.

6.6.2 Schedule Coordination. If, as a result of this Agreement, PacifiCorp is deemed by an RTO to be financially responsible for Seller's performance under the

Generation Interconnection Agreement due to Seller's lack of standing as a "scheduling coordinator" or other RTO recognized designation, qualification or otherwise, then (a) Seller shall acquire such RTO recognized standing (or shall contract with a third party who has such RTO recognized standing) such that PacifiCorp is no longer responsible for Seller's performance under the Generation Interconnection Agreement, and (b) Seller shall defend, indemnify and hold PacifiCorp harmless against any liability arising due to Seller's performance or failure to perform under the Generation Interconnection Agreement or RTO requirement.

6.7 Delivery Exceeding the Maximum GIA Delivery Rate. Seller shall not deliver energy from the Facility to the Point of Delivery at a rate that exceeds the Maximum GIA Delivery Rate. Seller's failure to limit such deliveries to the Maximum GIA Delivery Rate shall be a breach of a material obligation subject to Section 12.1.8.

6.8 Access Rights. Upon reasonable prior notice and subject to the prudent safety requirements of Seller, and Requirements of Law relating to workplace health and safety, Seller shall provide PacifiCorp and its authorized agents, employees and inspectors ("PacifiCorp Representatives") with reasonable access to the Facility: (a) for the purpose of reading or testing metering equipment, (b) as necessary to witness any acceptance tests, (c) for purposes of implementing Section 4.6, and (d) for other reasonable purposes at the reasonable request of PacifiCorp. PacifiCorp shall release Seller against and from any and all any and all loss, fines, penalties, claims, actions or suits, including costs and attorney's fees, both at trial and on appeal resulting from actions or omissions by any of the PacifiCorp Representatives in connection with their access to the Facility, except to the extent that such damages are caused or by the intentional or grossly negligent act or omission of Seller.

SECTION 7: MOTIVE FORCE

Prior to the execution of this Agreement, Seller provided to PacifiCorp Wind Leases and a motive force plan including an hourly wind profile acceptable to PacifiCorp in its reasonable discretion and attached hereto as **Exhibit F-1**, together with a certification from a Licensed Professional Engineer to PacifiCorp attached hereto as **Exhibit F-2**, certifying that the implementation of the fuel or motive force plan can reasonably be expected to provide fuel or motive force to the Facility for the duration of this Agreement adequate to generate power and energy in quantities necessary to deliver the Average Annual Net Output.

SECTION 8: GENERATION FORECASTING COSTS

8.1 Forecast Service Election. PacifiCorp may, in its discretion, add forecasting services for Seller's Facility to PacifiCorp's existing contract with a qualified wind-energy-production forecasting vendor, which contract and vendor may change during the term of this Agreement.

8.2 Seller's Forecast-Cost Share. Pursuant to Commission Order No. 30497, Seller shall be responsible for 50% of PacifiCorp's cost of adding such forecasting services (**"Seller's Forecast-Cost Share"**) up to Seller's Capped Forecast-Cost Share.

8.3 Cap on Seller's Forecast-Cost Share. Seller's Forecast-Cost Share for a given Contract Year is capped at 0.1% of total payments made by PacifiCorp to Seller for Net Output during the previous Contract Year (**"Seller's Capped Forecast-Cost Share"**). If the last Contract Year of this Agreement is shorter than a full calendar year, the cap will be prorated for that shortened year. For the year(s) prior to the second Contract Year of this agreement that equals a full calendar year, Seller's Forecast-Cost Share is capped at 0.1% of estimated payments for Net Output based on the Energy Delivery Schedule.

8.4 Payment. Seller shall pay to PacifiCorp Seller's Forecast-Cost Share uncapped by Section 8.3 for each Contract Year in equal payments for each month of such year except the last month of such year. (For example, in a Contract Year equaling a full calendar year, Seller would pay 1/11th of Seller's Forecast-Cost Share during each of the first 11 months.) In the last month of each Contract Year, PacifiCorp shall refund to Seller the amount paid by Seller under this Section in excess, if any, of Seller's Capped Forecast-Cost Share. For a Contract Year encompassed by just one calendar month, Seller's payment to PacifiCorp and PacifiCorp's refund to Seller shall be calculated and paid simultaneously. To the extent practicable, payments and refunds under this Section shall be included in monthly payments and invoices under Section 10.

SECTION 9: METERING; REPORTS AND RECORDS

9.1 Metering Adjustment. Metering will be performed at the location specified in **Exhibit B** and in the manner specified in the Generator Interconnection Agreement. All quantities of energy purchased hereunder shall be adjusted in accordance with **Addendum L**, so that the purchased amount reflects the net amount of power flowing into the System at the Point of Delivery.[1]

9.2 Metering Errors. If any inspections or tests made pursuant to the Generator Interconnection Agreement discloses an error exceeding two percent (2%), either fast or slow, proper correction, based upon the inaccuracy found, shall be made of previous readings for the actual period during which the metering equipment rendered inaccurate measurements if that period can be ascertained. If the actual period cannot be ascertained, the proper correction shall be made to the measurements taken during the time the metering equipment was in service since last tested, but not exceeding three Billing Periods, in the amount the metering equipment shall have been shown to be in error by such test. Any correction in billings or payments resulting from a correction in the meter records shall be made in the next monthly billing or payment rendered.

[1] If station service is supplied via separate facilities, PacifiCorp will deduct station service from the metered facility output to calculate Net Output.

9.3 Telemetering. In accordance with the Generation Interconnection Agreement, Seller shall provide telemetering equipment and facilities capable of transmitting to Transmission Provider (who will share it with PacifiCorp as authorized by **Exhibit H**, "Seller Authorization to Release Generation Data to PacifiCorp") the following information concerning the Facility on a real-time basis, and will operate such equipment when requested by PacifiCorp to indicate:

(a) instantaneous MW output at the Point of Delivery;

(b) Net Output;

(c) the Facility's total instantaneous generation capacity; and

(d) wind velocity at turbine hub height.

Seller shall also transmit to PacifiCorp any other data from the Facility that Seller receives on a real-time basis, including meteorological data, wind speed data, wind direction data and gross output data. Seller shall provide such real-time data to PacifiCorp in the same detail that Seller receives the data (e.g., if Seller receives the data in four second intervals, PacifiCorp shall also receive the data in four second intervals). PacifiCorp shall have the right from time to time to require Seller to provide additional telemetering equipment and facilities to the extent necessary and reasonable.

9.4 Monthly Reports and Logs and Other Information.

9.4.1 Reports. Within thirty (30) calendar days after the end of each Billing Period, Seller shall provide to PacifiCorp a report in electronic format, which report shall include (a) summaries of the Facility's wind and output data for the Billing Period in intervals not to exceed one hour (or such shorter period as is reasonably possible with commercially available technology), including information from the Facility's computer monitoring system; (b) summaries of any other significant events related to the construction or operation of the Facility for the Billing Period; (c) details of Availability of the Facility for the Billing Period sufficient to calculate Availability and including hourly average wind velocity measured at turbine hub height and ambient air temperature; and (d) any supporting information that PacifiCorp may from time to time reasonably request (including historical wind data for the Facility).

9.4.2 Electronic Fault Log. Seller shall maintain an electronic fault log of operations of the Facility during each hour of the term of this Agreement commencing on the Commercial Operation Date. Seller shall provide PacifiCorp with a copy of the electronic fault log within thirty (30) calendar days after the end of the Billing Period to which the fault log applies.

9.4.3 Upon the request of PacifiCorp, Seller shall provide PacifiCorp the manufacturers' guidelines and recommendations for maintenance of the Facility equipment.

9.4.4 By each January 10 following the Commercial Operation Date, Seller shall provide to PacifiCorp written certification that Seller has completed all the manufacturers' guidelines and recommendations for maintenance of the Facility equipment applicable to the previous calendar year.

9.4.5 At any time from the Effective Date, one (1) year's advance notice of the termination or expiration of any agreement, including Wind Leases, pursuant to which the Facility or any equipment relating thereto is upon the Facility site; provided that the foregoing does not authorize any early termination of any land lease.

9.4.6 As soon as it is known to Seller, Seller shall disclose to PacifiCorp, the extent of any material violation of any environmental laws or regulations arising out of the construction or operation of the Facility, or the presence of Environmental Contamination at the Facility or on the Premises, alleged to exist by any Governmental Authority having jurisdiction over the Premises, or the present existence of, or the occurrence during Seller's occupancy of the Premises of, any enforcement, legal, or regulatory action or proceeding relating to such alleged violation or alleged presence of Environmental Contamination presently occurring or having occurred during the period of time that Seller has occupied the Premises.

9.5 Maintenance of Metering Equipment. To the extent not otherwise provided in the Generator Interconnection Agreement, PacifiCorp shall inspect, test, repair and replace the metering equipment periodically, or at the request of Seller if Seller has reason to believe metering may be off and requests an inspection in writing. To the extent not otherwise provided in the Generator Interconnection Agreement, all PacifiCorp's costs relating to designing, installing, maintaining, and repairing metering equipment installed to accommodate Seller's Facility shall be borne by Seller.

SECTION 10: BILLINGS, COMPUTATIONS AND PAYMENTS

10.1 Payment for Net Output. On or before the thirtieth (30th) day following the end of each Billing Period, PacifiCorp shall send to Seller payment for Seller's deliveries of Net Output to PacifiCorp, together with computations supporting such payment. PacifiCorp may offset any such payment to reflect amounts owing from Seller to PacifiCorp pursuant to this Agreement or the Generation Interconnection Agreement . Any such offsets shall be separately itemized on the statement accompanying each payment to Seller.

10.2 Annual Invoicing for Output Shortfall. Thirty calendar days after the end of each Contract Year, PacifiCorp shall deliver to Seller an invoice showing PacifiCorp's computation of Output Shortfall, if any, for all Billing Periods in the prior Contract Year and Output Shortfall Damages, if any. In preparing such invoices, PacifiCorp shall utilize the meter data provided to PacifiCorp for the Contract Year in question, but may also rely on historical averages and such other information as may be available to PacifiCorp at the time of invoice preparation if the meter data for such Contract Year is then incomplete or otherwise not available. To the extent required, PacifiCorp shall prepare any such invoice as promptly

as practicable following its receipt of actual results for the relevant Contract Year. Seller shall pay to PacifiCorp, by wire transfer of immediately available funds to an account specified in writing by PacifiCorp or by any other means agreed to by the Parties in writing from time to time, the amount set forth as due in such invoice, and shall within thirty (30) days after receiving the invoice raise any objections regarding any disputed portion of the invoice. Objections not made by Seller within the thirty-day period shall be deemed waived.

10.3 Interest on Overdue Amounts. Any amounts owing after the due date thereof shall bear interest at the Prime Rate on the date the amount became due, plus two percent (2%), from the date due until paid; *provided, however*, that the interest rate shall at no time exceed the maximum rate allowed by applicable law.

10.4 Disputed Amounts. If either Party, in good faith, disputes any amount due pursuant to an invoice rendered hereunder, such Party shall notify the other Party of the specific basis for the dispute and, if the invoice shows an amount due, shall pay that portion of the statement that is undisputed, on or before the due date. Any such notice shall be provided within two (2) years of the date of the invoice in which the error first occurred. If any amount disputed by such Party is determined to be due to the other Party, or if the Parties resolve the payment dispute, the amount due shall be paid within five (5) days after such determination or resolution, along with interest in accordance with Section 10.3.

SECTION 11: SECURITY

11.1 Delay Security:

11.1.1 Duty to Post Security. By the date provided in Section 2.2.2, Seller shall post a Letter of Credit, cash or a parental guaranty, each in a form acceptable to PacifiCorp, in the amount of $1,429,585 as calculated pursuant to Section 11.1.2 ("**Delay Security**"). To the extent PacifiCorp receives payment from the Delay Security, Seller shall, within fifteen (15) calendar days, restore the Delay Security as if no such deduction had occurred.

11.1.2 Calculation of Delay Security. The dollar value of Delay Security shall equal the greater of: (1) forty-five dollars ($45) multiplied by the Maximum Facility Delivery Rate with the Maximum Facility Delivery Rate being measured in kW; or (2) the sum of the products, for each of the first three calendar months after the Scheduled Commercial Operation Date, of:

> the energy in the Initial Year Energy Delivery Schedule for the month (kWh) multiplied by the monthly weighted average On-Peak and Off-Peak Conforming Energy Purchase Price for the months ($/MWh) divided by 1000.

Such amount shall be fixed upon execution of this Agreement.

11.1.3 Right to Draw on Security. PacifiCorp shall have the right to draw on the Delay Security to collect Delay Liquidated Damages. Commencing on or about

first of each month, PacifiCorp will invoice Seller for Delay Liquidated Damages incurred, if any, during the preceding month. If insufficient Delay Security is available, Seller shall pay PacifiCorp for invoiced Delay Liquidated Damages no later than five business days after receiving such invoice. The Parties will make billings and payments for Delay Liquidated Damages in accordance with Section 10.

11.1.4 Partial Release of Delay Security. Provided that Seller has maintained Delay Security in accordance with Section 11.1.1, PacifiCorp shall release one-third of the original amount of Delay Security stated in Section 11.1.1 each time Seller accomplishes a milestone (a) or (b), below:

(a) Seller has (i) executed the Generation Interconnection Agreement with Transmission Provider; and (ii) paid in full any interconnection and/or system upgrade costs Seller is obligated to pay in advance of interconnection construction.

(b) Seller has poured the concrete foundation at each of its planned individual Wind Turbine locations.

PacifiCorp shall make the partial refund of Delay Security required above within ten business days of the date Seller provides PacifiCorp written notice (along with satisfactory documentation thereof) that it has accomplished milestone (a) or (b).

11.1.5 Full Release of Delay Security. Unless PacifiCorp disputes whether Seller has paid all Delay Liquidated Damages, PacifiCorp shall release all remaining Delay Security upon the earlier of the 30th calendar day following commencement of Commercial Operation or the 60th calendar day following PacifiCorp's termination of this Agreement.

11.1.6 Default. Seller's failure to post and maintain Delay Security in accordance with Section 11.1 will constitute an event of default, unless cured in accordance with Section 12.1.1 of this Agreement.

11.2 Default Security (Levelized Pricing Only).

Reserved.

SECTION 12: DEFAULTS AND REMEDIES

12.1 The following events shall constitute defaults under this Agreement:

12.1.1 Non-Payment. Seller's failure to make a payment when due under this Agreement or post and maintain security in conformance with the requirements of Section 11 or maintain insurance in conformance with the requirements of Section 14 of this Agreement, if the failure is not cured within ten (10) business days after the non-defaulting Party gives the defaulting Party a notice of the default.

12.1.2 Breach of Representation. Breach by a Party of a representation or warranty set forth in this Agreement, if such failure or breach is not cured within thirty (30) days following written notice.

12.1.3 Default on Other Agreements. Seller's failure to cure any default under the Generation Interconnection Agreement or any other agreement between the parties related to this Agreement, the Generation Interconnection Agreement, or the Facility within the time allowed for a cure under such agreement or instrument.

12.1.4 Insolvency. A Party (a) makes an assignment for the benefit of its creditors; (b) files a petition or otherwise commences, authorizes or acquiesces in the commencement of a proceeding or cause of action under any bankruptcy or similar law for the protection of creditors, or has such a petition filed against it and such petition is not withdrawn or dismissed within sixty (60) days after such filing; (c) becomes insolvent; or (d) is unable to pay its debts when due.

12.1.5 Material Adverse Change. A Material Adverse Change has occurred with respect to Seller and Seller fails to provide such performance assurances as are reasonably requested by PacifiCorp, within thirty (30) days from the date of such request.

12.1.6 Sale to Third-Party. Seller's sale of Net Output to an entity other than PacifiCorp, as prohibited by Section 4.2.

12.1.7 Non-Delivery. Unless excused by an event of Force Majeure, Seller's failure to deliver any Net Energy for three consecutive calendar months.

12.1.8 A Party otherwise fails to perform any material obligation (including but not limited to failure by Seller to meet any deadline set forth in Section 2.2.1 through 2.2.6) imposed upon that Party by this Agreement if the failure is not cured within thirty (30) days after the non-defaulting Party gives the defaulting Party notice of the default.

12.1.9 Seller fails to achieve the Commercial Online Date by the 91st day following the Scheduled Commercial Online Date, *provided, however,* that, upon written notice from the defaulting Party delivered prior to the 91st day of delay, this ninety (90) day period shall be extended by an additional one hundred and fifty (150) days if (a) Seller has poured the concrete foundation at each of its planned individual wind turbine locations; and (b) Seller replenishes Delay Default Security in accordance with Section 11.1.1. Seller shall continue to accrue Delay Liquidated Damages in accordance with Section 2.5 (Delay Price times the Delay Value) until the Project achieves Commercial Operation or this Agreement is terminated.

12.2 In the event of any default hereunder, the non-defaulting Party must notify the defaulting Party in writing of the circumstances indicating the default and outlining the requirements to cure the default. If the default has not been cured within the prescribed time,

above, the non-defaulting Party may terminate this Agreement at its sole discretion by delivering written notice to the other Party and may pursue any and all legal or equitable remedies provided by law or pursuant to this Agreement. The rights provided in this Section 12 are cumulative such that the exercise of one or more rights shall not constitute a waiver of any other rights.

12.3 In the event this Agreement is terminated because of Seller's default and Seller wishes to again sell Net Output from the facility using the same motive force to PacifiCorp following such termination, PacifiCorp in its sole discretion may require that Seller do so subject to the terms of this Agreement, including but not limited to the purchase prices as set forth in (Section 5), until the Expiration Date (as set forth in Section 2.1). At such time Seller and PacifiCorp agree to execute a written document ratifying the terms of this Agreement.

12.4 If this Agreement is terminated as a result of Seller's default, in addition to and not in limitation of any other right or remedy under this Agreement or applicable law (including any right to set-off, counterclaim, or otherwise withhold payment), Seller shall pay PacifiCorp Output Shortfall Damages for a period of eighteen (18) months from the date of termination plus the estimated administrative cost to acquire the replacement power. The Parties agree that the damages PacifiCorp would incur due to termination resulting from Seller's default would be difficult or impossible to predict with certainty, and that the damages in this Section 12.4 are an appropriate approximation of such damages.

12.5 Recoupment of Damages.

(a) Default Security Available. If Seller has posted Default Security, PacifiCorp may draw upon that security to satisfy any damages, above.

(b) Default Security Unavailable. If Seller has not posted Default Security, or if PacifiCorp has exhausted the Default Security, PacifiCorp may collect any remaining amount owing by partially withholding future payments to Seller over a reasonable period of time. PacifiCorp and Seller shall work together in good faith to establish the period, and monthly amounts, of such withholding so as to avoid Seller's default on its commercial or financing agreements necessary for its continued operation of the Facility.

12.6 Upon an event of default or termination event resulting from default under this Agreement, in addition to and not in limitation of any other right or remedy under this Agreement or applicable law (including any right to set-off, counterclaim, or otherwise withhold payment), the non-defaulting Party may at its option set-off, against any amounts owed to the defaulting Party, any amounts owed by the defaulting Party under any contract(s) or agreement(s) between the Parties. The obligations of the Parties shall be deemed satisfied and discharged to the extent of any such set-off. The non-defaulting Party shall give the defaulting Party written notice of any set-off, but failure to give such notice shall not affect the validity of the set-off.

12.7 Amounts owed by Seller pursuant to this Section 12 shall be due within five (5) business days after any invoice from PacifiCorp for the same.

SECTION 13: INDEMNIFICATION; LIABILITY

13.1 Indemnities.

13.1.1 Indemnity by Seller. Seller shall release, indemnify and hold harmless PacifiCorp, its directors, officers, agents, and representatives against and from any and all loss, fines, penalties, claims, actions or suits, including costs and attorney's fees, both at trial and on appeal, resulting from, or arising out of or in any way connected with (a) the energy delivered by Seller under this Agreement to and at the Point of Delivery, (b) any facilities on Seller's side of the Point of Delivery, (c) Seller's operation and/or maintenance of the Facility, or (d) arising from Seller's breach of this Agreement, including without limitation any loss, claim, action or suit, for or on account of injury, bodily or otherwise, to, or death of, persons, or for damage to, or destruction or economic loss of property belonging to PacifiCorp, Seller or others, excepting only such loss, claim, action or suit as may be caused solely by the fault or gross negligence of PacifiCorp, its directors, officers, employees, agents or representatives.

13.1.2 Indemnity by PacifiCorp. PacifiCorp shall release, indemnify and hold harmless Seller, its directors, officers, agents, lenders and representatives against and from any and all loss, fines, penalties, claims, actions or suits, including costs and attorney's fees, both at trial and on appeal, resulting from, or arising out of or in any way connected with the energy delivered by Seller under this Agreement after the Point of Delivery, including without limitation any loss, claim, action or suit, for or on account of injury, bodily or otherwise, to, or death of, persons, or for damage to, or destruction or economic loss of property, excepting only such loss, claim, action or suit as may be caused solely by the fault or gross negligence of Seller, its directors, officers, employees, agents, lenders or representatives.

13.2 No Dedication. Nothing in this Agreement shall be construed to create any duty to, any standard of care with reference to, or any liability to any person not a Party to this Agreement. No undertaking by one Party to the other under any provision of this Agreement shall constitute the dedication of that Party's system or any portion thereof to the other Party or to the public, nor affect the status of PacifiCorp as an independent public utility corporation or Seller as an independent individual or entity.

13.3 No Warranty. Any review, acceptance or failure to review Seller's design, specifications, equipment or facilities shall not be an endorsement or a confirmation by PacifiCorp and PacifiCorp makes no warranties, expressed or implied, regarding any aspect of Seller's design, specifications, equipment or facilities, including, but not limited to, safety, durability, reliability, strength, capacity, adequacy or economic feasibility.

13.4 CONSEQUENTIAL DAMAGES. EXCEPT TO THE EXTENT SUCH DAMAGES ARE INCLUDED IN THE LIQUIDATED DAMAGES, DELAY DAMAGES, OR OTHER SPECIFIED MEASURE OF DAMAGES EXPRESSLY PROVIDED FOR IN THIS AGREEMENT, NEITHER PARTY SHALL BE LIABLE TO THE OTHER PARTY

FOR SPECIAL, PUNITIVE, INDIRECT, EXEMPLARY OR CONSEQUENTIAL DAMAGES, WHETHER SUCH DAMAGES ARE ALLOWED OR PROVIDED BY CONTRACT, TORT (INCLUDING NEGLIGENCE), STRICT LIABILITY, STATUTE OR OTHERWISE.

SECTION 14: INSURANCE

14.1 Certificates. Prior to connection of the Facility to the System, Seller shall secure and continuously carry insurance in compliance with the requirements of this Section. Seller shall provide PacifiCorp insurance certificate(s) (of "ACORD Form" or the equivalent) certifying Seller's compliance with the insurance requirements hereunder. Commercial General Liability coverage written on a "claims-made" basis, if any, shall be specifically identified on the certificate. If requested by PacifiCorp, a copy of each insurance policy, certified as a true copy by an authorized representative of the issuing insurance company, shall be furnished to PacifiCorp.

14.2 Required Policies and Coverages. Without limiting any liabilities or any other obligations of Seller under this Agreement, Seller shall secure and continuously carry with an insurance company or companies rated not lower than "A-:VII" by the A.M. Insurance Reports the insurance coverage specified below:

14.2.1 Commercial General Liability insurance, to include contractual liability, with a minimum single limit of $1,000,000 per occurrence to protect against and from all loss by reason of injury to persons or damage to property based upon and arising out of the activity under this Agreement.

14.2.2 All Risk Property insurance providing coverage in an amount at least equal to 80% of the replacement value of the Facility against "all risks" of physical loss or damage, including coverage for earth movement, flood, and boiler and machinery. The Property policy may contain separate sub-limits and deductibles subject to insurance company underwriting guidelines. The Risk Policy will be maintained in accordance with terms available in the insurance market for similar facilities.

14.3 The Commercial General Liability policy required herein shall include (i) provisions or endorsements naming PacifiCorp, its Board of Directors, Officers and employees as additional insureds, and (ii) cross liability coverage so that the insurance applies separately to each insured against whom claim is made or suit is brought, even in instances where one insured claims against or sues another insured.

14.4 All liability policies required by this Agreement shall include provisions that such insurance is primary insurance with respect to the interests of PacifiCorp and that any other insurance maintained by PacifiCorp is excess and not contributory insurance with the insurance required hereunder, and provisions that such policies shall not be canceled or their limits of liability reduced without (i) ten (10) business days prior written notice to PacifiCorp

if canceled for nonpayment of premium, or (ii) thirty (30) business days prior written notice to PacifiCorp if canceled for any other reason.

14.5 Commercial General Liability insurance coverage provided on a "claims-made" basis shall be maintained by Seller for a minimum period of five (5) years after the completion of this Agreement and for such other length of time necessary to cover liabilities arising out of the activities under this Agreement.

SECTION 15: FORCE MAJEURE

15.1 As used in this Agreement, **"Force Majeure"** or **"an event of Force Majeure"** means any cause beyond the reasonable control of the Seller or of PacifiCorp which, despite the exercise of due diligence, such Party is unable to prevent or overcome. By way of example, Force Majeure may include but is not limited to acts of God, flood, storms, wars, hostilities, civil strife, strikes, and other labor disturbances, earthquakes, fires, lightning, epidemics, sabotage, restraint by court order or other delay or failure in the performance as a result of any action or inaction on behalf of a public authority which is in each case (i) beyond the reasonable control of such Party, (ii) by the exercise of reasonable foresight such Party could not reasonably have been expected to avoid and (iii) by the exercise of due diligence, such Party shall be unable to prevent or overcome. Force Majeure, however, specifically excludes the cost or availability of fuel or motive force to operate the Facility or changes in market conditions that affect the price of energy or transmission. If either Party is rendered wholly or in part unable to perform its obligation under this Agreement because of an event of Force Majeure, both Parties shall be excused from whatever performance is affected by the event of Force Majeure, provided that:

15.1.1 the non-performing Party, shall, within two (2) weeks after the occurrence of the Force Majeure, give the other Party written notice describing the particulars of the occurrence, including the start date of the Force Majeure, the cause of Force Majeure, whether the Facility remains partially operational and the expected end date of the Force Majeure;

15.1.2 the suspension of performance shall be of no greater scope and of no longer duration than is required by the Force Majeure;

15.1.3 the non-performing Party uses its best efforts to remedy its inability to perform; and

15.1.4 the non-performing Party shall provide prompt written notice to the other Party at the end of the Force Majeure event detailing the end date, cause there of, damage caused there by and any repairs that were required as a result of the Force Majeure event, and the end date of the Force Majeure.

15.2 No obligations of either Party which arose before the Force Majeure causing the suspension of performance shall be excused as a result of the Force Majeure.

15.3 Neither Party shall be required to settle any strike, walkout, lockout or other labor dispute on terms which, in the sole judgment of the Party involved in the dispute, are contrary to the Party's best interests.

SECTION 16: SEVERAL OBLIGATIONS

Nothing contained in this Agreement shall ever be construed to create an association, trust, partnership or joint venture or to impose a trust or partnership duty, obligation or liability between the Parties. If Seller includes two or more parties, each such party shall be jointly and severally liable for Seller's obligations under this Agreement.

SECTION 17: CHOICE OF LAW

This Agreement shall be interpreted and enforced in accordance with the laws of the state of Idaho, excluding any choice of law rules which may direct the application of the laws of another jurisdiction.

SECTION 18: PARTIAL INVALIDITY

It is not the intention of the Parties to violate any laws governing the subject matter of this Agreement. If any of the terms of the Agreement are finally held or determined to be invalid, illegal or void as being contrary to any applicable law or public policy, all other terms of the Agreement shall remain in effect. If any terms are finally held or determined to be invalid, illegal or void, the Parties shall enter into negotiations concerning the terms affected by such decision for the purpose of achieving conformity with requirements of any applicable law and the intent of the Parties to this Agreement.

SECTION 19: WAIVER

Any waiver at any time by either Party of its rights with respect to a default under this Agreement or with respect to any other matters arising in connection with this Agreement must be in writing, and such waiver shall not be deemed a waiver with respect to any subsequent default or other matter.

SECTION 20: GOVERNMENTAL JURISDICTION AND AUTHORIZATIONS

PacifiCorp's compliance with the terms of this Agreement is conditioned on Seller's submission to PacifiCorp prior to the Commercial Operation Date of copies of all local, state and federal licenses, permits and other approvals as then may be required by law for the construction, operation and maintenance of the Facility. Failure to maintain such lawful status after the Commercial Operation Date shall be an event of default, subject to Section 12.

SECTION 21: SUCCESSORS AND ASSIGNS

This Agreement and all of the terms and provisions hereof shall be binding upon and inure to the benefit of the respective successors and assigns of the Parties hereto, except that no assignment hereof by either Party shall become effective without the written consent of both Parties being first obtained. Such consent shall not be unreasonably withheld. Notwithstanding the foregoing, any entity with which PacifiCorp may consolidate, or into which it may merge, or to which it may convey or transfer substantially all of its electric utility assets, shall automatically, without further act, and without need of consent or approval by the Seller, succeed to all of PacifiCorp's rights, obligations, and interests under this Agreement. This article shall not prevent a financing entity with recorded or secured rights from exercising all rights and remedies available to it under law or contract. PacifiCorp shall have the right to be notified by the financing entity that it is exercising such rights or remedies.

SECTION 22: ENTIRE AGREEMENT

22.1 This Agreement supersedes all prior agreements, proposals, representations, negotiations, discussions or letters, whether oral or in writing, regarding PacifiCorp's purchase of Net Output from the Facility. No modification of this Agreement shall be effective unless it is in writing and signed by both Parties.

22.2 By executing this Agreement, each Party releases the other from any claims, known or unknown, that may have arisen prior to the execution date of this Agreement with respect to the Facility and any predecessor facility proposed to have been constructed on the site of the Facility.

SECTION 23: NOTICES

All notices except as otherwise provided in this Agreement shall be in writing, shall be directed as follows and shall be considered delivered if delivered in person or when deposited in the U.S. Mail, postage prepaid by certified or registered mail and return receipt requested.

Notices	**PacifiCorp**	**Seller**
All Notices	PacifiCorp 825 NE Multnomah Street Portland, OR 97232 Attn: Contract Administration, Suite 600 Phone: (503) 813 - 5380 Facsimile: (503) 813 – 6291 E-mail: Duns: 00-790-9013 Federal Tax ID Number: 93-0246090	Cedar Creek Wind, LLC 701B Winslow Way E Bainbridge Island, WA 98110 Attn: Richard W. Burkhardt Phone: (206) 780 - 3551 Facsimile: (206) 780 - 3571 E-mail: rburkhardt@summitpower.com Duns: 83-297-9483 Federal Tax ID Number:80-0326531

Notices	PacifiCorp	Seller
All Invoices:	Attn: Back Office, Suite 700 Phone: (503) 813 - 5578 Facsimile: (503) 813 – 5580	Attn:(accounting@summitpower.com) Vici Hall, General Accounting Manager (vhall@summitpower.com) Phone: (206) 780-3551
Scheduling:	Attn: Resource Planning, Suite 600 Phone: (503) 813 - 6090 Facsimile: (503) 813 – 6265	Attn: (tcameron@summitpower.com) Thomas Cameron (702) 360-0186
Payments:	Attn: Back Office, Suite 700 Phone: (503) 813 - 5578 Facsimile: (503) 813 – 5580	Attn:(accounting@summitpower.com) Vici Hall, General Accounting Manager (vhall@summitpower.com) Phone: (206) 780-3551
Wire Transfer:	Bank One N.A. To be provided in separate letter from PacifiCorp to Seller	BNK: Wells Fargo To be provided in separate letter from Seller to PacifiCorp
Credit and Collections:	Attn: Credit Manager, Suite 700 Phone: (503) 813 - 5684 Facsimile: (503) 813-5609	Attn: Richard W. Burkhardt (rburkhardt@summitpower.com) Chief Financial Officer Phone: (206) 780-3551
With Additional Notices of an Event of Default or Potential Event of Default to:	Attn: PacifiCorp General Counsel Phone: (503) 813-5029 Facsimile: (503) 813-6761	Attn: Richard W. Burkhardt (rburkhardt@summitpower.com) Chief Financial Officer Phone: (206) 780-3551 Davis Wright Tremaine LLP 1201 Third Avenue, Suite 2200 Seattle, WA 98101 Attention: Scott MacCormack Facsimile No.: (206) 757-7263

The Parties may change the person to whom such notices are addressed, or their addresses, by providing written notices thereof in accordance with this Section.

IN WITNESS WHEREOF, the Parties hereto have caused this Agreement to be executed in their respective names as of the date first above written.

PacifiCorp

By: _____

Name: Bruce Griswold

Title: Director, Short Term Origination and QF Contracts

Seller (Cedar Creek Wind, LLC)

By: _____ for CCW

Name: Scott Montgomery

Title: President

EXHIBIT A

DESCRIPTION OF SELLER'S FACILITY

[Seller to Complete]

Seller's Facility consists of 12 wind turbine generator(s) manufactured by Siemens. More specifically, each generator at the Facility is described as:

Type (synchronous or inductive): Asynchronous with Inverter

Model: Siemens SWT-2.3-101
Number of Phases: Three
Rated Output (kW): 2,300 **Rated Output (kVA):** 2,555
Rated Voltage (line to line): 750V
Rated Current (A): Stator: Converter Supply Current: 1953A; Rotor: 2070 A
Maximum kW Output: 2300 kW **Maximum kVA Output:** 2555kVA
Minimum kW Output: __40___ kW
Manufacturer's Published Cut-in Wind Speed: 4 meters/second

Facility Capacity Rating: 27,600 kW at or above rated wind speed and below cut-out speed_____
Maximum Facility Delivery Rate: ___27,176_____ kW at PacifiCorp Goshen Substation at 345 kV_____
Maximum GIA Delivery Rate 151,800 - instantaneous kW [combined with the other Cedar Creek Projects described in **Addendum L**]

Identify the maximum output of the generator(s) and describe any differences between that output and the Nameplate Capacity Rating: Maximum generator output is 2300 kW (same as Nameplate Capacity Rating)
Station service requirements, and other loads served by the Facility, if any, are described as follows: Station service requirements consist of Cedar Creek Wind Operations and Maintenance building loads, turbine standby loads, and turbine cutout loads. Average turbine standby load for Rattlesnake Canyon is approximately 60 kW. Cutout loads would be infrequent and not concurrent with standby loads.

Location of the Facility: The Facility is located in Bingham County, Idaho. The location is more particularly described as follows: 43° 17.177' Latitude, 112° 2.997' Longitude WGS84. Locations of each turbine tower relative to other qualifying facilities owned by Cedar Creek Wind showing Cedar Creek Wind's compliance with the spacing requirements in 18 C.F.R. § 292.204 are attached hereto.

Power factor requirements:
Rated Power Factor (PF) or reactive load (kVAR): 0.9 Leading to 0.9 Lagging

Seller has provided a copy of manufacturer's Power Curve (Rev. 4, June 2010) for the Siemens SWT-2.3-101. PacifiCorp maintains the power curve in its files pursuant to a Non-Disclosure Agreement between PacifiCorp and Seller.

EXHIBIT A - Attachments

1. Cedar Creek Wind Farm Site Map
2. Distance Between Wind Turbines of Adjacent Qualifying Facilities

Western Energy Group, LLC - Cedar Creek Wind Farm

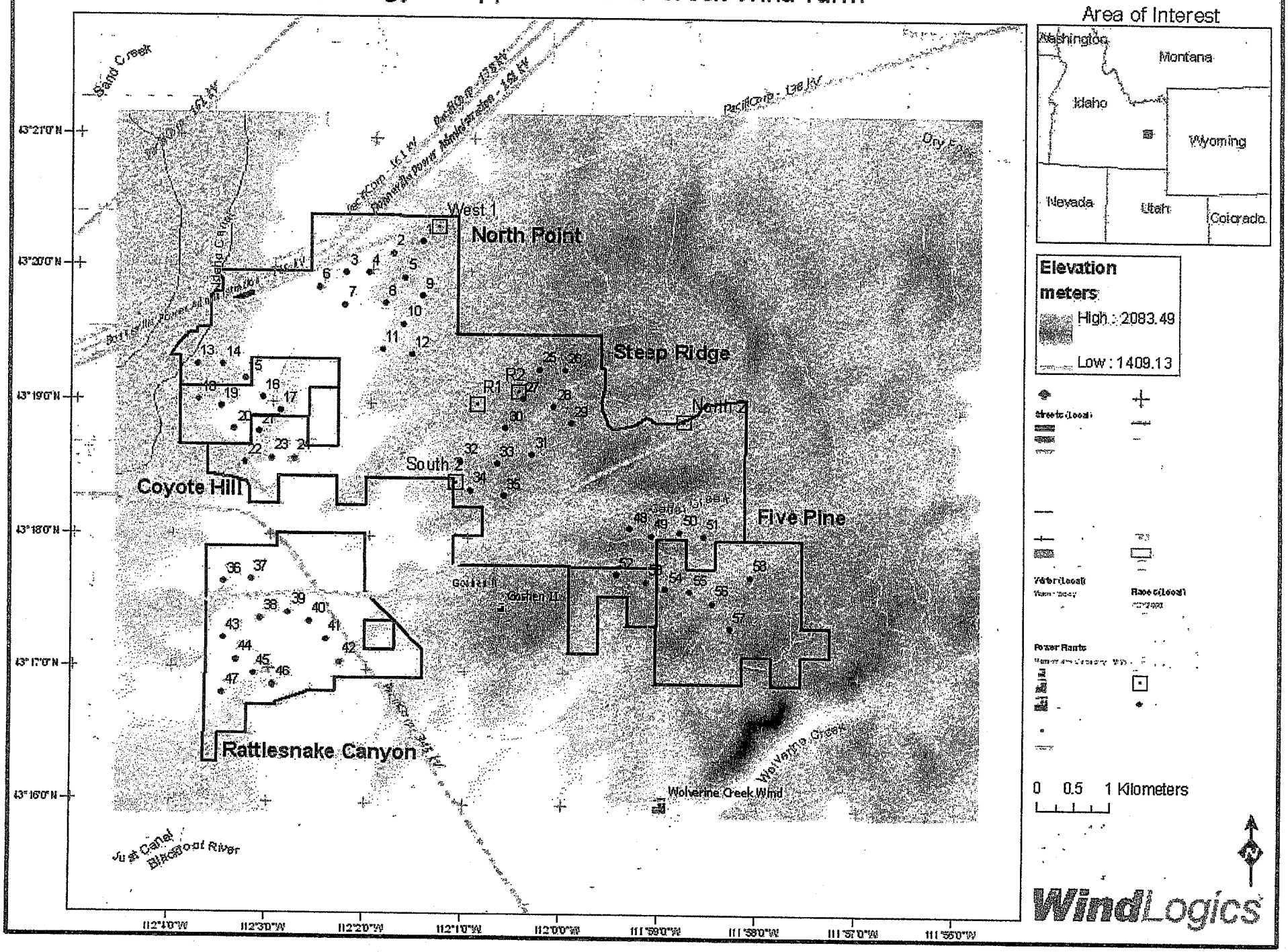

Distance Between Wind Turbines of Adjacent Qualifying Facilities

Date **11/16/2010**

The table below lists the distance between turbines in separate Qualifiying Facilities. These distances are based on the turbine locations defined by Wind Logics in their Turbine Layouts Revision 5 document dated 11/16/10.

North Point/Coyote Hill		
Turbine	Turbine	Distance
T6	T14	5632.2'
T6	T15	5356.1'
T6	T16	5638.0'
T7	T14	6161.2'
T7	T15	5610.9'
T7	T16	5594.1'
T7	T17	5595.3'
T11	T15	6361.3'
T11	T16	5842.6'
T11	T17	5401.7'

Coyote Hill/Rattlesnake Canyon		
Turbine	Turbine	Distance
T36	T22	5558.5'
T36	T23	6057.0'
T36	T24	6504.5'
T37	T22	5378.4'
T37	T23	5629.7'
T37	T24	5898.8'

North Point/Steep Ridge		
Turbine	Turbine	Distance
T12	T25	5799.5'
T12	T27	5397.2'
T12	T30	5401.6'
T12	T32	5358.6'

Steep Ridge/Coyote Hill		
Turbine	Turbine	Distance
T32	T24	7534.9'

Steep Ridge/Rattlesnake Canyon		
Turbine	Turbine	Distance
T34	T40	9448.3'

Steep Ridge/Five Pine		
Turbine	Turbine	Distance
T48	T29	5466.8'
T48	T31	5558.3'
T48	T35	5921.7'

Verified by:

David Romrell, PLS, Harper-Leavitt Engineering

PROFESSIONAL LAND SURVEYOR REGISTERED 11/16/10 12223 STATE OF IDAHO DAVID B. ROMRELL

EXHIBIT B

POINT OF DELIVERY / PARTIES' INTERCONNECTION FACILITIES

[Seller has provided the following single line drawing of the Facility interconnection facilities including metering points used to calculate Net Output and any transmission facilities on Seller's side of the Point of Delivery.]

The Metering Point and the Point of Delivery is the PacifiCorp 345kV bus at the Goshen substation.

The Project will be shared by a 34.5kV-345kV collector substation. Each project will have a 34.5kV breaker that will connect to a common 34.5kV bus. The bus will connect to a central 34.5kV main breaker, 34.5-345kV Power Transformer, 345kV breaker, line disconnect switch and a 5.1 mile 345kV transmission line to the Goshen Substation.

EXHIBIT B - Attachments

1. Substation Metering One-Line Diagram

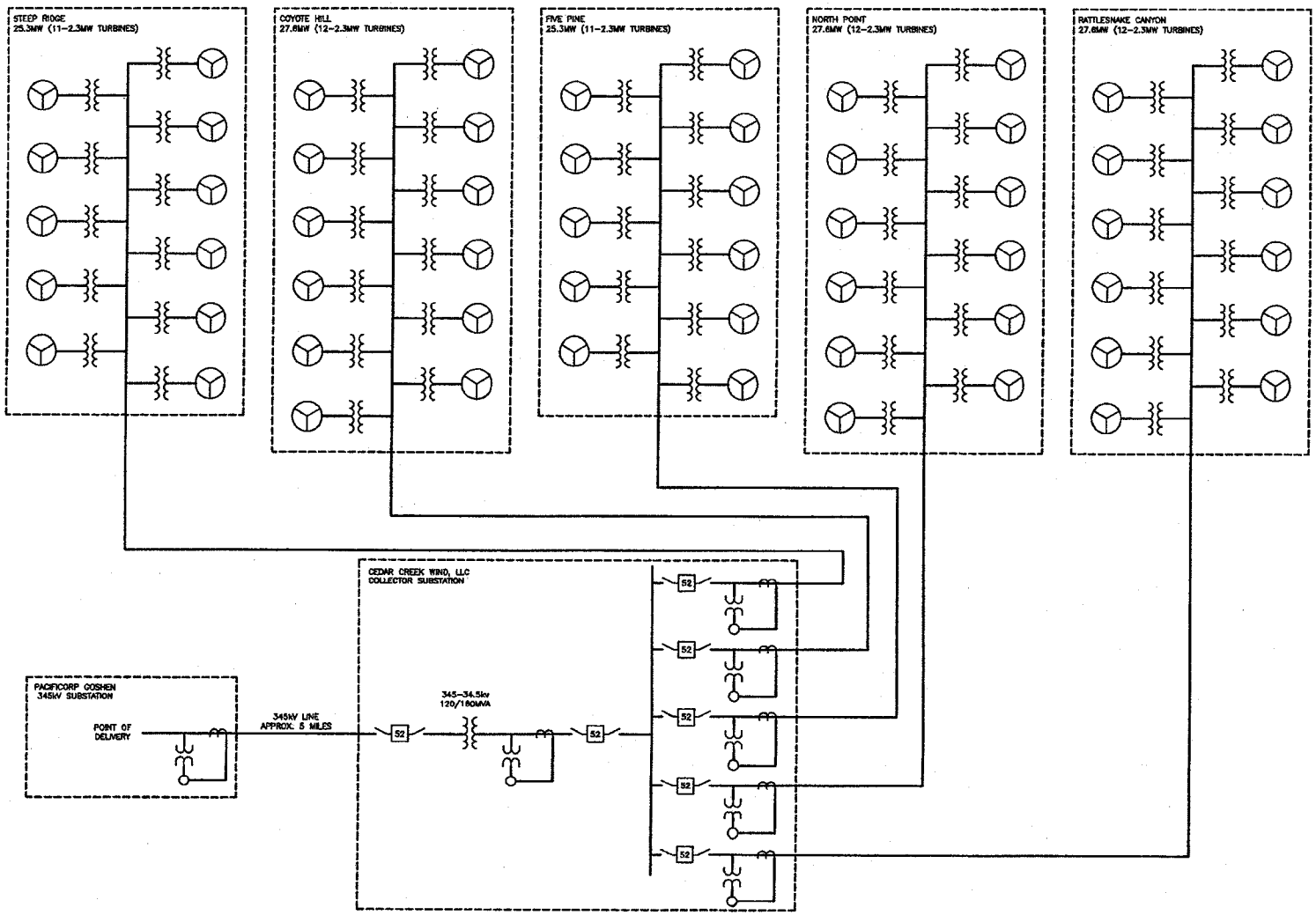

HDR

HDR Engineering, Inc.

ISSUE	DATE	DESCRIPTION
–	11/17/10	FOR REVIEW

PROJECT MANAGER	RANDY OJEDA
DESIGNED BY	
CHECKED BY	
DRAWN BY	B. MALE
PROJECT NUMBER	600000000146546

PRELIMINARY NOT FOR CONSTRUCTION OR RECORDING

CEDAR CREEK WIND, LLC
BINGHAM COUNTY, IDAHO

SUBSTATION METERING ONE-LINE DIAGRAM

0 1" 2"

FILENAME	00E001.dwg
SCALE	NONE

SHEET 00E001

EXHIBIT C

REQUIRED FACILITY DOCUMENTS

Qualifying Facility Number from FERC: QF10-535-000

The following Documents are required prior to delivery of any output from the Facility:

Generation Interconnection Agreement

Agreement permitting Seller access to shared interconnection facilities

Property rights required to maintain and operate the Project in accordance with this Agreement (site leases, transmission easements, etc).

The following Permits are required on or before the milestone date specified in Section 2.2.1.

Federal Aviation Administration Determination of No Hazard

Bingham County Special Use Permit

Crossing agreements with parties other than PacifiCorp Transmission

EXHIBIT D

SUBSEQUENT ENERGY DELIVERY SCHEDULE

Rattlesnake Canyon Wind Project		
	Scheduled Monthly Energy Delivery	Ave kW/mo
January		
February		
March		
April		
May		
June		
July		
August		
September		
October		
November		
December		
TOTAL:		

Planned Outages. Seller will provide a Planned Outage schedule annually not to exceed 150 hours per year.

EXHIBIT E

START-UP TESTING

Required factory testing includes such checks and tests necessary to determine that the equipment systems and subsystems have been properly manufactured and installed, function properly, and are in a condition to permit safe and efficient start-up of the Facility, which may include but are not limited to:

1. Test of mechanical and electrical equipment;
2. Calibration of all monitoring instruments;
3. Operating tests of all valves, operators, motor starters and motor;
4. Alarms, signals, and fail-safe or system shutdown control tests;
5. Point-to-point continuity tests;
6. Bench tests of protective devices; and
7. Tests required by manufacturer(s) and designer(s) of equipment.

Required start-up tests are those checks and tests necessary to determine that all features and equipment, systems, and subsystems have been properly installed and adjusted, function properly, and are capable of operating simultaneously in such condition that the Facility is capable of continuous delivery into PacifiCorp's electrical system, which may include but are not limited to:

1. Turbine/generator mechanical runs and functionality;
2. System operation tests;
3. Brake tests;
4. Energization of transformers;
5. Synchronizing tests (manual and auto);
6. Excitation and voltage regulation operation tests;
7. Auto stop/start sequence;
8. Completion of any state and federal environmental testing requirements; and
9. Tests required by manufacturer(s) and designer(s) of equipment.

For wind projects only, the following Wind Turbine Generator Installation Checklists are required documents to be signed off by Manufacturer or Subcontract Category Commissioning Personnel as part of the Commissioning and startup testing:

Turbine Installation
Foundation Inspection (by Owner's independent inspector)
Controller Assembly
Power Cables
Cable Installation Checklists including:
- Controller
- Top Deck / Yaw Deck
- Tower Top Section / Saddle
- Mid Section Cables or buss bars
- Base Section

Tower Base Section
Tower Lights and Outlets
Tower Mid Section
Tower Top Section
Nacelle
Rotor

EXHIBIT F-1

MOTIVE FORCE PLAN

WIND SPEED DATA SUMMARIES & HOURLY WIND PROFILE

Western Energy - Cedar Creek Wind Farm - Optimized Turbine Layout (Version 5)
Rattlesnake Canyon
Turbine: Siemens SWT-2.3-101

99.5 meters Normalized

Average of Wind Speed (m/s)	Month												
Local Hour (GMT -8)	1	2	3	4	5	6	7	8	9	10	11	12	Grand Total
0	7.77	7.11	6.44	7.13	6.29	5.30	6.68	6.37	7.22	8.00	7.48	7.42	6.93
1	7.77	7.30	6.24	6.89	6.54	5.10	6.04	6.24	7.24	8.16	7.65	7.38	6.88
2	7.74	7.57	6.41	7.15	6.57	5.70	5.94	6.40	7.01	7.94	7.65	7.48	6.97
3	7.74	7.41	6.80	7.03	6.48	6.25	5.50	6.09	6.87	7.75	7.66	7.59	6.93
4	7.79	7.31	6.97	6.66	6.64	6.37	5.29	5.97	7.02	6.91	7.56	7.34	6.82
5	7.83	7.23	6.46	6.71	6.72	6.03	5.58	6.16	7.17	7.26	7.50	7.27	6.83
6	7.71	7.00	6.29	6.79	5.73	5.02	4.38	5.95	7.49	6.81	7.54	7.28	6.51
7	7.82	7.25	6.47	6.37	4.91	5.47	3.87	5.07	7.03	6.97	7.56	7.02	6.32
8	7.72	7.12	6.52	6.06	4.71	5.30	3.79	4.75	5.92	6.32	7.17	6.64	6.00
9	6.97	6.69	6.57	5.96	4.93	5.66	4.36	4.88	4.96	5.18	6.52	6.50	5.76
10	6.83	6.10	6.33	5.88	5.56	6.32	4.76	5.86	5.57	5.23	6.09	6.62	5.93
11	6.92	5.72	6.24	6.02	6.09	7.40	5.68	6.55	6.38	5.18	6.18	6.36	6.23
12	6.57	5.55	6.46	6.46	6.43	8.27	6.70	7.05	6.67	5.09	5.93	6.12	6.44
13	5.94	5.76	6.78	6.42	6.87	8.47	7.11	7.71	7.16	5.07	5.98	6.13	6.62
14	5.58	5.75	7.00	6.12	7.05	8.57	8.88	7.98	7.39	5.42	5.84	6.45	6.84
15	6.31	5.70	7.09	5.85	6.86	8.25	8.93	7.69	7.58	6.02	6.09	6.57	6.91
16	6.38	6.12	7.20	6.34	6.53	8.19	8.98	8.56	6.77	5.93	6.40	6.64	7.01
17	6.47	6.07	7.02	6.15	6.75	8.39	8.95	8.32	6.46	6.26	6.48	6.52	6.99
18	6.64	6.24	7.12	6.93	7.17	8.28	8.45	8.10	6.35	7.13	6.48	6.96	7.16
19	6.87	6.79	6.46	7.08	7.27	7.31	7.93	7.83	6.21	7.41	6.19	6.86	7.02
20	7.26	7.34	6.40	7.14	6.75	6.92	7.74	7.66	6.50	7.49	6.69	7.23	7.09
21	7.23	7.23	6.71	6.53	7.06	5.92	7.44	7.50	6.81	8.20	7.38	7.37	7.12
22	7.36	7.23	6.67	6.21	6.48	5.21	7.06	7.08	7.85	8.17	7.27	7.32	6.99
23	7.96	7.41	6.40	6.53	6.30	5.16	7.22	6.21	7.79	8.16	7.08	7.43	6.97
Grand Total	7.13	6.71	6.63	6.52	6.36	6.62	6.57	6.75	6.81	6.75	6.85	6.94	6.72

Western Energy - Cedar Creek Wind Farm - Optimized Turbine Layout (Version 5)
Rattlesnake Canyon
Turbine: Siemens SWT-2.3-101

99.5 meters Normalized

Average of Net Capacity Factor (%)	Month												
Local Hour (GMT -8)	1	2	3	4	5	6	7	8	9	10	11	12	Grand Total
0	34.22	35.82	28.39	36.26	24.32	17.75	29.00	27.58	33.60	39.73	35.73	35.20	31.45
1	35.18	36.40	26.06	32.49	24.81	19.34	26.11	29.72	34.78	41.26	37.30	36.45	31.66
2	34.61	36.96	26.87	33.25	24.87	22.37	26.10	29.19	32.78	40.10	37.87	35.96	31.73
3	33.44	34.89	31.20	30.80	27.90	24.53	21.91	28.16	34.65	38.26	37.76	40.26	32.01
4	35.04	33.94	33.89	29.52	28.80	25.46	21.29	26.40	33.80	30.61	37.22	38.90	31.27
5	35.26	32.38	30.19	30.84	29.25	25.15	23.39	27.24	34.13	34.44	39.19	38.49	31.69
6	35.14	30.72	28.45	30.96	21.06	17.65	15.41	25.55	37.12	29.68	39.84	38.27	29.19
7	37.98	33.70	30.70	27.46	14.72	18.77	10.99	17.84	31.66	33.60	40.69	35.88	27.86
8	37.07	32.90	30.32	25.38	13.33	16.90	8.01	14.30	22.80	25.14	35.86	33.84	24.67
9	28.79	31.03	31.60	23.80	14.81	19.68	10.49	16.13	14.11	17.62	30.27	31.39	22.45
10	25.16	27.09	29.09	25.04	19.60	24.12	11.20	24.29	19.38	16.42	30.46	31.56	23.61
11	26.56	23.31	26.54	25.20	24.57	35.48	20.57	28.68	22.12	17.47	31.32	31.42	26.11
12	29.82	22.27	28.48	30.16	27.20	44.49	28.95	32.10	28.30	17.47	30.12	28.82	29.02
13	26.06	22.90	32.32	30.29	30.29	46.61	31.39	38.75	33.23	16.38	30.11	28.22	30.56
14	24.25	22.79	34.00	27.18	33.40	47.94	36.68	39.49	35.57	18.14	28.60	27.77	31.33
15	25.85	22.72	34.23	23.55	31.58	44.51	44.72	37.73	35.39	23.89	30.36	28.21	31.92
16	26.21	29.65	34.38	23.78	28.12	43.08	46.81	43.62	28.69	22.83	33.22	28.11	32.36
17	24.09	28.84	33.97	25.29	32.39	43.91	46.53	45.25	27.41	27.29	31.52	28.26	32.90
18	24.25	28.32	33.71	30.06	37.12	42.20	41.31	37.69	28.38	34.72	31.15	31.38	33.38
19	28.38	30.77	28.68	29.89	37.26	35.64	37.14	34.44	30.39	33.68	28.09	30.22	32.06
20	30.29	35.04	27.29	31.26	31.07	30.06	32.17	36.27	32.61	34.55	31.70	32.78	32.07
21	30.14	33.05	30.15	29.87	34.99	22.82	32.43	37.82	31.92	42.12	36.64	34.95	33.11
22	31.34	32.36	30.75	25.70	30.48	16.30	31.03	34.27	37.49	42.17	36.88	33.26	31.87
23	35.50	35.76	27.69	30.40	27.09	15.30	32.50	27.70	37.90	42.84	33.74	34.57	31.74
Grand Total	30.61	30.57	30.37	28.68	27.04	29.17	27.84	30.84	30.76	30.02	33.98	33.09	30.25

EXHIBIT F-2

ENGINEER'S CERTIFICATION

RATTLESNAKE CANYON

I hereby certify that I am a Licensed Professional Engineer who is licensed to practice engineering in the state of Idaho and that I have no economic relationship, association, or nexus with Cedar Creek Wind, LLC and no involvement in the subject wind project.

Having reviewed, and in reliance[1] upon the Western Energy Group, LLC, Cedar Creek, Idaho, Site Visit Summary report dated September 30, 2010, and Cedar Creek Wind Farm Turbine Layout Analysis dated November 16, 2010, prepared by Wind Logics on behalf of Cedar Creek Wind, LLC, I hereby certify:

(1) THAT THE WIND DATA SUMMARIES IN EXHIBIT F-1 ARE ACCURATE;

Robert Looper, State of Idaho Professional Engineer # 8155

(2) THAT THE AVERAGE ANNUAL NET OUTPUT ESTIMATE IS 73,115,397 KWH PER YEAR IN EACH FULL CALENDAR YEAR OF THIS AGREEMENT BASED ON THE MOTIVE FORCE PLAN IN EXHIBIT F-1;

Robert Looper, State of Idaho Professional Engineer # 8155

(3) THAT THE FACILITY, UNDER AVERAGE DESIGN CONDITIONS, LIKELY WILL GENERATE NO MORE THAN 10 aMW IN ANY CALENDAR MONTH.

Robert Looper, State of Idaho Professional Engineer # 8155

PROFESSIONAL ENGINEER REGISTERED 8155 STATE OF IDAHO ROBERT LOOPER

[1] No independent verification of the raw wind data contained in summary form in Exhibit F-1 has been conducted.

EXHIBIT G

SAMPLE ENERGY PURCHASE PRICE CALCULATIONS

The following are samples of calculations of energy purchase prices using the formula and tables in Section 5.1.

The calculation for the non-levelized purchase price during an On-Peak Hour in May of 2011 equals $60.24/MWh (the 2011 annual rate for Conforming Energy) multiplied by 92% (0.92) (the May On-Peak Hour multiplier) minus $6.50/MWh (the wind integration cost), which equals $48.92/MWh.

Table 1: Sample calculations for non-levelized On-Peak Conforming Energy in 2011: Purchase Price = (annual rate * monthly On-Peak multiplier) – wind integration cost.

Month	Conforming Energy Annual Rate for 2011 (per MWh)	On-Peak Hour Multiplier	Wind Integration Cost	Calculated Purchase Price for 2011 On-Peak Conforming Energy (per MWh)
January	$60.24	103%	$6.50	$55.55
February	$60.24	105%	$6.50	$56.75
March	$60.24	95%	$6.50	$50.73
April	$60.24	95%	$6.50	$50.73
May	$60.24	92%	$6.50	$48.92
June	$60.24	94%	$6.50	$50.13
July	$60.24	121%	$6.50	$66.39
August	$60.24	121%	$6.50	$66.39
September	$60.24	109%	$6.50	$59.16
October	$60.24	115%	$6.50	$62.78
November	$60.24	110%	$6.50	$59.76
December	$60.24	129%	$6.50	$71.21

Table 2: Sample calculations for non-levelized Off-Peak Conforming Energy in 2011: Purchase Price = (annual rate * monthly Off-Peak multiplier) – wind integration cost.

Month	Conforming Energy Annual Rate for 2011 (per MWh)	Off-Peak Hour Multiplier	Wind Integration Cost	Calculated Purchase Price for 2011 Off-Peak Conforming Energy (per MWh)
January	$60.24	94%	$6.50	$50.13
February	$60.24	97%	$6.50	$51.93
March	$60.24	80%	$6.50	$41.69

Month	Conforming Energy Annual Rate for 2011 (per MWh)	Off-Peak Hour Multiplier	Wind Integration Cost	Calculated Purchase Price for 2011 Off-Peak Conforming Energy (per MWh)
April	$60.24	76%	$6.50	$39.28
May	$60.24	63%	$6.50	$31.45
June	$60.24	65%	$6.50	$32.66
July	$60.24	92%	$6.50	$48.92
August	$60.24	106%	$6.50	$57.35
September	$60.24	99%	$6.50	$53.14
October	$60.24	105%	$6.50	$56.75
November	$60.24	96%	$6.50	$51.33
December	$60.24	120%	$6.50	$65.79

EXHIBIT H

Seller Authorization to Release Generation Data to PacifiCorp

WESTERNENERGY

SUMMIT POWER

May 7, 2010

Pacificorp
Attn: Kenneth Huston
825 NE Multnomah, Ste. 1600,
Portland, Oregon 97232

RE: Cedar Creek Wind, LLC PacifiCorp Transmission

Dear Mr. Huston:

Cedar Creek Wind, LLC hereby voluntarily authorizes PacifiCorp's Transmission business unit to share Cedar Creek Wind, LLC's generator interconnection information and generator meter data with market function employees of PacifiCorp, including, but not limited to the those in the Commercial and Trading group. Cedar Creek Wind, LLC acknowledges that PacifiCorp did not provide it any preferences, either operational or rate-related, in exchange for this voluntary consent.

Sincerely,

Dana Zentz

Dana C. Zentz, P.E.
Vice President
Summit Power Group, Inc./Cedar Creek Wind, LLC
(509) 448-7589 (Office)
(509) 954-4103 (Mobile)

ADDENDUM L

STATION LOAD, LOSSES, and NET OUTPUT ALLOCATION ALGORITHM FOR THE CEDAR CREEK WIND, LLC PROJECTS

This Addendum L is hereby made a part of, and clarifies certain terms in, the *Power Purchase Agreement between Cedar Creek Wind, LLC relating to RATTLESNAKE CANYON, and PacifiCorp* ("**Agreement**") entered into the 22nd day of December 2010. Capitalized terms not defined herein shall have the meaning set forth in the Agreement. Cedar Creek Wind, LLC ("**Seller**") and PacifiCorp are at times referred to herein individually as a "**Party**" or collectively as the "**Parties**".

Cedar Creek Wind, LLC shall own a complex of five (namely, Coyote Hill, Five Pine, Steep Ridge, North Point, and Rattlesnake Canyon) separate, Idaho small wind Qualifying Facilities (each, a "**Cedar Creek Project**" and collectively, the "**Cedar Creek Projects**") that share collector wires, a 34.5/345 kV substation (Cedar Creek Substation), and related equipment, which connect the Qualifying Facilities to the Point of Delivery ("**Shared Interconnection Facilities**").

PacifiCorp has agreed to buy (and Seller has agreed to sell), at the Point of Delivery, Seller's total energy output net of: (1) Seller's station service; (2) energy provided by Seller to another Cedar Creek Project for station service; (3) Seller's share of the transformation losses; and (4) Seller's share of the line losses between Seller's Facility and the Point of Delivery (together Seller's "**Station Auxiliary Load and Losses**"). However, Seller and PacifiCorp agree that it is impossible to measure Seller's Station Auxiliary Load and Losses separate and apart from the Station Auxiliary Load and Losses of the other Cedar Creek Projects. Therefore, in order to implement an objective, practicable, and equitable process by which PacifiCorp may quantify energy delivered by Seller to the Point of Delivery (net of its Station Auxiliary Load and Losses), the Parties do agree as follows:

A. Billing Formulae. PacifiCorp shall determine Seller's Net Output in kWh for purposes of the Agreement using the method specified below.

1. Definitions

NR_i = the nameplate rating (a/k/a Facility Capacity Rating) of Cedar Creek Project i

NR_T = the sum of all the nameplate ratings of Cedar Creek Projects (i = 1 to 5).

$PALL_T$ = the accumulated purchased energy from Utility Supplier, as determined at the Point of Delivery, to supply the net total station auxiliary load and losses for the Shared Interconnection Facilities for Cedar Creek Projects i = 1 to 5 whenever such total load and losses exceeds total generation output.

$PALL_i$ = the allocated share of $PALL_T$ for Project i as determined by multiplying $PALL_T$ by NR_i and dividing by NR_T.

OP_i = for a given integration interval, the metered output energy of Cedar Creek Project i, as determined by PacifiCorp's meter at the point where Cedar Creek Project i connects to the Shared Interconnection Facilities. For any integration interval during which any energy is delivered to a Project from the Shared Interconnection Facilities, such delivered energy is accumulated in a separate meter register and does not decrement the register used to measure accumulated OP_i. Therefore OP_i is by definition always greater than or equal to zero, and in the event the meter records OP_i less than zero, OP_i shall be deemed to equal zero.

OP_T = the sum of all OP_i (i = 1 to 5).

NO_T = for a given integration interval, the total energy delivered to the Point of Delivery (345 kV bus at Goshen Substation). NO_T shall be as measured at PacifiCorp's meter near the Point of Delivery (kWh, in 10-minute intervals), adjusted for any transformation losses between the meter and the Point of Delivery. For any integration interval during which any energy is delivered to the Point of Delivery from PacifiCorp's system, such delivered energy is accumulated in a separate meter register of the PacifiCorp meter and does not decrement the register used to measure accumulated Net Output energy. Therefore NO_T is by definition always greater than or equal to zero and in the event the meter records NO_T less than zero, NO_T shall be deemed to equal zero.

NO_i = the net energy sold to PacifiCorp by Cedar Creek Project i during the integration interval.

$SALL_T$ = the total of all station auxiliary load and losses for the Shared Interconnection Facilities for Cedar Creek Projects (i = 1 to 5) when NO_T is positive.

$SALL_i$ = the allocated share for Cedar Creek Project i of $SALL_T$.

2. Calculations

Calculations shall be reconciled and settled monthly. Calculations shall be based upon raw data gathered from specified meters using a metering integration interval of 5, 10, or 15 minutes at PacifiCorp's election to match the metering installation PacifiCorp specified ("**integration interval**"). Calculations shall be rounded to the nearest kilowatt-hour in the final step.

(a). When Total Generation Output <= Station Auxiliary Load and Losses

When, for any integration interval, the total of all OP_i Project output amounts of energy among all Cedar Creek Projects (OP_T) is less than or equal to the total station auxiliary load and losses for the Shared Interconnection Facilities, the meters at the Point of Delivery will accumulate the Utility Supplier's delivery of purchased energy, $PALL_T$, to supply such net total load and losses in a meter register that is separate from that which accumulates NO_T and NO_T shall equal zero or if negative, be deemed to equal zero. The "**Utility Supplier**" shall be the utility providing retail electric service at the Facility (Rocky Mountain Power). PacifiCorp shall have no obligation to serve any of the Cedar Creek Projects' retail electric needs absent a separate written agreement with PacifiCorp and then only with the permission of Seller's Utility Supplier. None of the costs associated with provision of retail electric service to Seller shall be borne by PacifiCorp.

(b). When Total Generation Output > Station Auxiliary Load and Losses

When, for any integration interval, the total generation of energy among all Cedar Creek Projects is greater than the total station auxiliary load and losses for the Shared Interconnection Facilities, the meters at the Point of Delivery will accumulate in a separate register PacifiCorp's receipt of the total combined energy from all the Projects (NO_T). The difference between OP_T and NO_T for that interval ($SALL_T$) is allocated to each Cedar Creek Project in proportion to its generation output (OP_i) in the same integration interval to determine NO_i by the formulae:

Let $SALL_T = [\ OP_T - NO_T\ ]$ and

$$SALL_i = [\ SALL_T\ ] * [\ OP_i / OP_T\ ]$$

The Net Output energy sold by each Project i is then determined as:

$NO_i = [\ OP_i - SALL_i\ ]$ and substituting for $SALL_i$;

$$NO_i = NO_T * [\ OP_i / OP_T\ ]$$

B. Limitation of PacifiCorp Purchase Liability. PacifiCorp's total purchase obligation to the Cedar Creek Projects shall at no time exceed total energy delivered by the Cedar Creek Projects to the Point of Delivery. Therefore, in the event the sum of the Net Output energy (calculated according to the preceding formulae) for all the Cedar Creek Projects is greater than NO_T, then PacifiCorp shall reduce calculated Net Output energy from each Cedar Creek Project, pro rata each Cedar Creek Project's share of the OP_T, such that the total energy purchased from all the Cedar Creek Projects at the Point of Delivery by PacifiCorp equals NO_T.

C. PacifiCorp Right to Offset. In the event PacifiCorp determines it has underpaid one or more Cedar Creek Projects (due to metering error or otherwise) and, as a result of underpaying one or more Cedar Creek Projects, has overpaid Seller, PacifiCorp may adjust Seller's future payment(s) accordingly in order to recapture any overpayment received by Seller in a reasonable time.

D. Condition Subsequent. This Addendum L was negotiated jointly among the Cedar Creek Projects and PacifiCorp and is intended by all of the Cedar Creek Projects and PacifiCorp to be one of five identical bilateral agreements, each between PacifiCorp and a Cedar Creek Project, but each related to the other. Therefore, in the event one or more Cedar Creek Projects does not agree to be bound by the terms and conditions set forth in this Addendum L, PacifiCorp may, upon thirty days written notice, cancel all Addendum L agreements. In the event PacifiCorp cancels this Addendum L in accordance with this Section D, PacifiCorp may satisfy its obligation to pay Seller by depositing when due, with an escrow agent chosen by the Cedar Creek Projects, the total payment due to all Cedar Creek Projects under their respective Power Purchase Agreements, less offsets (if any) calculated based upon NO_T and the Contract Price.

[END]