RECEIVED
2015 December 23 PM 3:23
IDAHO PUBLIC
UTILITIES COMMISSION

MOFFATT THOMAS
Attorneys at Law

Randall A. Peterman
Mark S. Prusynski
Stephen R. Thomas
Gerald T. Husch
Scott L. Campbell
Patricia M. Olsson
Christine E. Nicholas
Bradley J Williams
Lee Radford
James L. Martin

C. Clayton Gill
David P. Gardner
Julian E. Gabiola
Cynthia A. Melillo
Jon A. Stenquist
C. Edward Cather III
Mark C. Peterson
Tyler J. Anderson
David K. Penrod
Blake G. Swenson

Benjamin C. Ritchie
Matthew J. McGee
Mindy M. Muller
Jetta Hatch Mathews
Andrea J. Rosholt
Kirk J. Houston
Jamie K. Moon
Jerry T. Stenquist
Sarah A. McCormack

Of Counsel:
Larry C. Hunter
Gary T. Dance
John S. Simko
David B. Lincoln
Norman M. Semanko

MAILING ADDRESS:
PO Box 829
Boise ID 83701-0829

www.moffatt.com

PHYSICAL ADDRESS:
101 S Capitol Blvd 10th Fl
Boise ID 83702-7710

208.345.2000 MAIN
800.422.2889 TOLL-FREE
208.385.5384 FAX

December 23, 2015
via Electronic Mail

Ms. Jean Jewell
Executive Secretary
Idaho Public Utilities Commission
472 West Washington Street
Boise, ID 83702

Re: Silver Star Telephone Company - Case No. SIL-T-15-01
Columbine Telephone Company - Case No. COL-T-15-01
MTBR&F File No. 26354.0001

Dear Ms. Jewell:

This firm represents Silver Star Telephone Company ("Silver Star") and Columbine Telephone Company ("Columbine") in connection with the filing of the revised Idaho Rural Exchange Carriers Access Service Tariff Number 3 (the "Tariff") in connection with the above referenced cases. As you may know, Columbine and Silver Star are affiliated entities. Pursuant to the above referenced cases, Columbine acquired all of Silver Star's local exchange assets in a corporate restructuring. Thus, Silver Star will no longer provide service to any customers, and all the customers previously served by Silver Star will now be served by Columbine. Order No. 33423 requires that Columbine file an amended Tariff prior to the Commission issuing a revised Certificate to Columbine. This Tariff revision is being submitted in accordance with Order No. 33423.

Enclosed are the proposed revisions in redline format and the full Tariff in clean and redline format. As you can see, Silver Star is being deleted from the Tariff as it will no longer be an Issuing Carrier and any changes to Columbine's rates as a result of the restructure are reflected in the rates listed for Columbine in the revised Tariff.

It is requested that this filing become effective January 1, 2016.

If you have any questions or require further information, please contact me at (208) 385-5335 or by e-mail at cam@moffatt.com.

Sincerely,

Cynthia A. Melillo

CAM/jmm

ACCESS SERVICE

Regulations, rates, and charges
applying to the provision of Access Service
for connection to intrastate communications facilities
for intrastate customers within the operating territory
of the Issuing Carriers listed on Sheet No. 1.

Access Services are provided by means of wire, fiber optics, radio, or any other suitable technology or combination thereof.

The following companies are telephone cooperatives, and neither their rates or service offerings are subject to Commission jurisdiction. Their rates are listed in this tariff for the convenience of the public and for informational purposes only. (T)

Custer Telephone Cooperative, Inc.
Farmers Mutual Telephone Company
Filer Mutual Telephone Company
Mud Lake Telephone Cooperative Association, Inc.
Project Mutual Telephone Cooperative Association, Inc. (T)

ACCESS SERVICE

Issuing Carriers

Albion Telephone Company
Highway 77
Albion, Idaho 83311

Cambridge Telephone Company
100 Superior St.
Cambridge, Idaho 83610

Columbine Telephone Company, Inc.
d.b.a. Silver Star Communications (T)
P.O. Box 226
Freedom, Wyoming 83120

Custer Telephone Cooperative, Inc.
Main Street
Challis, Idaho 83226

Direct Communications Rockland, Inc.
147 W. 4th Avenue
Rockland, Idaho 83271

Farmers Mutual Tele. Company
Iowa Street
Fruitland, Idaho 83619

Filer Mutual Telephone Company (D)
405 Main Street
Filer, Idaho 83328

Fremont Telecom Co.
(D)
(D)
110 E. Main Street
St. Anthony, Idaho 83445

Inland Telephone Company
P.O. Box 171
Roslyn, Washington 98941

Midvale Telephone Exchange, Inc.
P.O. Box 7
2205 Keithley Creek Road
Midvale, Idaho 83645

Mud Lake Telephone Cooperative Association, Inc.
P.O. Box 235
Dubois, Idaho 83423

Potlatch Telephone Company, Inc.
P.O. Box 121
Kendrick, Idaho 83537

Project Mutual Telephone Cooperative Association, Inc.
702 5th Street
Rupert, Idaho 83350

Rural Telephone Company
P.O. Box 969
Glenns Ferry, Idaho 83623

(Continued)

ACCESS SERVICE

Check Sheet

This Check Sheet contains the following sheets that are effective as of the date shown on each sheet. Original and revised sheets as named below contain all changes from the original tariff that are in effect on the date hereof.

Sheet	Revision Number	Sheet	Revision Number
Title	1st Revised	16	Original
1	5th Revised	17	Original
2	22nd Revised*	18	Original
3	5th Revised	19	Original
4	2nd Revised	20	Original
5	1st Revised	21	Original
6	Original	22	Original
7	Original	23	1st Revised
8	Original	24	2nd Revised
9	10th Revised*	25	1st Revised
10	11th Revised*	26	1st Revised
11	11th Revised*	27	3rd Revised
12	9th Revised*	28	Original
12.1	3rd Revised*	29	Original
13	Original	30	Original
14	Original	31	Original
15	1st Revised		

* New or revised sheet.

(Continued)

ACCESS SERVICE

Check Sheet

Sheet	Revision Number	Sheet	Revision Number
32	Original	55	Original
33	Original	56	Original
34	Original	57	Original
35	Original	58	Original
36	1st Revised*	59	Original
37	Original	60	Original
38	Original	61	Original
39	Original	62	Original
40	Original	63	Original
41	Original	64	Original
42	Original	65	Original
43	Original	66	2nd Revised
44	Original	66.1	1st Revised
45	Original	66.2	2nd Revised
46	Original	66.3	1st Revised
47	Original	66.4	1st Revised
48	Original	66.5	Original
49	Original	66.6	Original
50	Original	66.7	Original
51	Original	67	Original
52	Original	68	Original
53	Original	69	1st Revised
54	Original	69.1	Original

* New or revised sheet.

(Continued)

ACCESS SERVICE

Check Sheet

Sheet	Revision Number	Sheet	Revision Number
70	Original	91	Original
71	Original	92	Original
72	Original	93	Original
73	Original	94	Original
74	Original	95	Original
75	Original	96	Original
76	Original	97	Original
77	Original	98	1st Revised
78	Original	99	1st Revised*
79	Original	100	Original
80	Original	101	Original
81	Original	102	Original
82	Original	103	Original
83	Original	104	Original
84	Original	105	Original
85	Original	106	Original
86	Original	107	Original
87	Original	108	Original
88	Original	109	Original
89	Original	110	Original
90	Original	111	Original

* New or revised sheet.

(Continued)

ACCESS SERVICE

Check Sheet

Sheet	Revision Number	Sheet	Revision Number
112	Original	124	Original
113	Original	125	Original
114	Original	126	Original
115	Original	127	Original
116	1st Revised*	128	Original
116.1	Original*	129	Original
116.2	Original*	130	Original
116.3	Original*	131	Original
116.4	Original*	132	Original
116.5	Original*	133	Original
116.6	Original*	134	Original
116.7	Original*	135	Original
117	1st Revised*	136	Original
118	1st Revised*	137	Original
119	1st Revised*	138	Original
120	1st Revised*	139	Original
121	1st Revised*	140	Original
121.1	Original*	141	Original
121.2	Original*	142	Original
121.3	Original*	143	Original
122	Original	144	Original
123	Original	145	Original

* New or revised sheet.

(Continued)

ACCESS SERVICE

Check Sheet

Sheet	Revision Number	Sheet	Revision Number
146	Original	166*	Original
147	Original	167*	Original
148	Original	168*	Original
149	Original	169*	Original
150	Original	170*	Original
151	Original	171*	Original
152*	Original	172*	Original
153*	Original	173*	Original
154*	Original	174*	Original
155*	Original	175*	Original
156*	Original	176*	Original
157*	Original	177*	Original
158*	Original	178*	Original
159*	Original	179*	Original
160*	Original	180*	Original
161*	Original	181*	Original
162*	Original	182*	Original
163*	Original	183*	Original
164*	Original	184*	Original
165*	Original	185*	Original
		186*	Original

* New or revised sheet.

(Continued)

ACCESS SERVICE

Check Sheet

Sheet	Revision Number	Sheet	Revision Number
187*	Original	207*	Original
188*	Original	208*	Original
189*	Original	209*	Original
190*	Original	210*	Original
191*	Original	211*	Original
192*	Original	212*	Original
193*	Original	213*	Original
194*	Original	214*	Original
195*	Original	215*	Original
196*	Original	216*	Original
197*	Original	217*	Original
198*	Original	218*	Original
199*	Original	219*	Original
200*	Original	220*	Original
201*	Original	221*	Original
202*	Original	222*	Original
203*	Original	223*	Original
204*	Original	224*	Original
205*	Original	225*	Original
206*	Original	226*	Original

* New or revised sheet.

(Continued)

ACCESS SERVICE

Check Sheet

Sheet	Revision Number	Sheet	Revision Number
227*	Original	248*	Original
228*	Original	249*	Original
229*	Original	250*	Original
230*	Original	251*	Original
231*	Original	252*	Original
232*	Original	253*	Original
233*	Original	254*	Original
234*	Original	255*	Original
235*	Original	256*	Original
236*	Original	257*	Original
237*	Original	258*	Original
238*	Original	259*	Original
239*	Original	260*	Original
240*	Original	261*	Original
241*	Original	262*	Original
242*	Original	263*	Original
243*	Original	264*	Original
244*	Original	265*	Original
245*	Original	266*	Original
246*	Original	267*	Original
247*	Original	268*	Original

* New or revised sheet.

(Continued)

ACCESS SERVICE

Check Sheet

Sheet	Revision Number	Sheet	Revision Number
269	Original	290	Original
270	Original	291	Original
271	Original	292	1st Revised
272	Original	293	1st Revised
273	Original	294	3rd Revised*
274	Original	294.1	2nd Revised*
275	Original	294.2	2nd Revised*
276	Original	294.3	1st Revised
277	Original	295	1st Revised
278	Original	296	Original
279	Original	297	Original
280	Original	298	Original
281	Original	299	Original
282	Original	300	Original
283	Original	301	1st Revised
284	Original	302	2nd Revised
285	2nd Revised	303	3rd Revised*
285.1	2nd Revised*	303.1	2nd Revised*
285.2	2nd Revised*	303.2	2nd Revised*
285.3	1st Revised	303.3	2nd Revised*
286	2nd Revised	303.4	1st Revised
287	Original	304	1st Revised
288	Original	305	1st Revised*
289	Original		

* New or revised sheet.

(Continued)

ACCESS SERVICE

Check Sheet

Sheet	Revision Number	Sheet	Revision Number
306	1st Revised*1st	319	Original
307	Revised*	320	Original
308	2nd Revised*	321	Original
309	6th Revised*	322	Original
309.1	3rd Revised*	323	Original
309.2	3rd Revised*	324	1st Revised
309.3	3rd Revised	325	1st Revised
310	3rd Revised	326	1st Revised
311	Original	327	5th Revised*
312	Original	327.1	3rd Revised*
313	Original	327.2	3rd Revised*
314	1st Revised	327.3	2nd Revised
315	1st Revised	328	2nd Revised
315.1	Original	329	Original
315.2	Original	330	Original
316	1st Revised	331	Original
316.1	1st Revised	332	Original
317	4th Revised*	333	Original
317.1	3rd Revised*	334	1st Revised
317.2	3rd Revised*	334.1	1st Revised
317.3	3rd Revised*	335	4th Revised*
317.4	1st Revised	335.1	3rd Revised*
318	1st Revised	335.2	3rd Revised*

* New or revised sheet.

(Continued)

ACCESS SERVICE

Check Sheet

Sheet	Revision Number	Sheet	Revision Number
335.3	3rd Revised	353	Original
336	1st Revised	354	1st Revised
337	Original	355	Original
338	Original	356	1st Revised
339	Original	357	5th Revised*
340	Original	357.1	4th Revised*
341	Original	357.2	4th Revised*
342	1st Revised	357.3	3rd Revised
342.1	Original	358	1st Revised
343	4th Revised*	359	Original
343.1	2nd Revised*	360	Original
343.2	2nd Revised*	361	Original
343.3	2nd Revised*	362	Original
343.4	1st Revised	363	Original
344	2nd Revised	363.1	Original
345	Original	364	1st Revised
346	Original	364.1	4th Revised*
347	Original	364.1.1	2nd Revised*
348	Original	364.1.2	2nd Revised*
349	Original	364.1.3	1st Revised
350	Original	364.2	2nd Revised
351	Original	364.3	1st Revised
352	Original	364.4	1st Revised

* New or revised sheet.

(Continued)

ACCESS SERVICE

Check Sheet

Sheet	Revision Number	Sheet	Revision Number
364.5	1st Revised	377	Original
364.6	1st Revised	378	Original
364.7	1st Revised	379	Original
364.8	2nd Revised	380	1st Revised
364.9	2nd Revised	381	2nd Revised
364.10	1st Revised	382	4th Revised*
364.11	1st Revised	382.1	2nd Revised*
365	5th Revised	382.2	2nd Revised*
365.1	4th Revised	382.3	1st Revised
365.2	3rd Revised	383	3rd Revised
365.3	2nd Revised	384	Original
366	3rd Revised	385	Original
367	Original	386	Original
368	Original	387	Original
369	Original	388	Original
370	Original	389	1st Revised
371	1st Revised	389.1	Original
372	1st Revised	390	3rd Revised*
373	4th Revised	390.1	2nd Revised*
373.1	3rd Revised	390.2	2nd Revised*
373.2	3rd Revised	390.3	1st Revised
373.3	3rd Revised	391	1st Revised
373.4	2nd Revised	392	Original
374	1st Revised		
375	Original		
376	Original		

* New or revised sheet.

(Continued)

ACCESS SERVICE

Check Sheet

Sheet	Revision Number	Sheet	Revision Number
393	Original	404	1st Revised*Original
394	Original	405	2nd Revised
395	Original	405.1	1st Revised
396	Original	406	
397	1st Revised		
397.1	Original		
398	4th Revised*		
398.1	3rd Revised*		
398.2	3rd Revised*		
398.3	3rd Revised*		
398.4	2nd Revised		
399	2nd Revised		
400	1st Revised*		
401	1st Revised*		
402	1st Revised*		
403	1st Revised*		

* New or revised sheet.

(Continued)

ACCESS SERVICE

Table of Contents

Subject	Sheet No.
Title Sheet	Title
Issuing Carriers	1
Check Sheet	2
Table of Contents	13
Concurring Carriers	28
Connecting Carriers	28
Other Participating Carriers	28
Registered Service Trademarks	28
Registered Trademarks	28
Explanation of Symbols	29
Explanation of Abbreviations	29
Reference to Other Tariffs	33
Use of the Tariff	33
Contact Information	35
Reference to Technical Publications	36
1. Application of Tariff	36
2. General Regulations	36
2.1 Undertaking of the Telephone Company	36
2.1.1 Scope	36
2.1.2 Limitations	37
2.1.3 Liability	38
2.1.4 Provision of Services	41

(Continued)

ACCESS SERVICE

Table of Contents

Subject Sheet No.

2. General Regulations (Cont'd)

2.1 Undertaking of the Telephone Company (Cont'd)
2.1.5 Installation and Termination of Services 41
2.1.6 Maintenance of Services 41
2.1.7 Changes and Substitutions 42
2.1.8 Refusal and Discontinuance of Service 42
2.1.9 Limitation of Use of Metallic Facilities 44
2.1.10 Notification of Service-Affecting Activities 45
2.1.11 Provision and Ownership of Telephone Numbers 45
2.1.12 Coordination with Respect to Network Contingencies 46

2.2 Use 46
2.2.1 Interference or Impairment 46
2.2.2 Unlawful Use 47

2.3 Obligations of the Customer 47
2.3.1 Damages 47
2.3.2 Ownership of Facilities 48
2.3.3 Equipment Space and Power 48
2.3.4 Availability for Testing 48
2.3.5 Balance 49
2.3.6 Design of Customer Services 49

(Continued)

ACCESS SERVICE

Table of Contents

Subject | Sheet No.

2. General Regulations (Cont'd)

2.3 Obligations of the Customer (Cont'd)
2.3.7 Reference to the Telephone Company 49
2.3.8 Claims and Demands for Damages 50
2.3.9 Jurisdictional Report Requirements 51
2.3.10 Determination of Intrastate Charges for Mixed Interstate and Intrastate Switched Access Service 65
2.3.11 Identification and Rating of VoIP-PSTN Traffic ..... 66.1 (N)

2.4 Payment Arrangements and Credit Allowance ..... 66.7 (T)
2.4.1 Payment of Rates, Charges, and Deposits ..... 66.7 (T)
2.4.2 Minimum Periods 71
2.4.3 Credit Allowance for Service Interruptions 72
2.4.4 Re-establishment of Service Following Fire, Flood, or Other Occurrence 75
2.4.5 Access Service Provided by More Than One Telephone Company 76

2.5 Connections 80
2.5.1 General 80

2.6 Definitions 80

(Continued)

ACCESS SERVICE

Table of Contents

Subject	Sheet No.
3. Carrier Common Line Access Service	99
3.1 General Description	99
3.2 Limitations	99
3.3 Undertaking of the Telephone Company	100
3.4 Obligations of the Customer	100
3.5 Rate Regulations	101
4. Ordering Options for Switched and Special Access Service	103
4.1 General	103
4.1.1 Ordering Conditions	103
4.1.2 Provision of Other Services	104
4.2 Access Order	105
4.3 Calculation of Busy Hour Minutes of Capacity (BHMC)	107

(Continued)

ACCESS SERVICE

Table of Contents

Subject | Sheet No.

4. Ordering Options for Switched and Special Access Service (Cont'd)

4.4 Access Order Service Date Intervals 109

4.5 Access Order Modifications 109
4.5.1 Service Date Change 110
4.5.2 Partial Cancellation 111

4.6 Cancellation of an Access Order 111

4.7 Selection of Facilities for Access Orders 113

4.8 Minimum Period Charge 113

4.9 Access Orders for Services Provided by More than One Telephone Company 114

5. Switched Access Service 115

5.1 General 115

(Continued)

ACCESS SERVICE

Table of Contents

Subject | Sheet No.

5. Switched Access Service (Cont'd)

5.2 Rate Categories 116

5.3 Provision and Description of Switched Access Service Feature Groups 122
5.3.1 Feature Group A (FGA) 123
5.3.2 Feature Group B (FGB) 131
5.3.3 Feature Group C (FGC) 136
5.3.4 Feature Group D (FGD) 143
5.3.5 800 Data Base Access Service 150

5.4 Transmission Specifications 153

5.5 Obligations of the Telephone Company 154
5.5.1 Network Management 155
5.5.2 Design and Traffic Routing of Switched Access Service 156
5.5.3 Provision of Service Performance Data 157
5.5.4 Trunk Group Measurement Reports 157
5.5.5 Determination of Number of Transmission Paths 158
5.5.6 Design Blocking Measurement 158

(Continued)

ACCESS SERVICE

Table of Contents

Subject | Sheet No.

5. Switched Access Service (Cont'd)

5.6 Obligations of the Customer 162
5.6.1 Supervisory Signaling 162
5.6.2 Trunk Group Measurement Reports 163

5.7 Rate Regulations 163
5.7.1 Application of Rates and Charges 163
5.7.2 Minimum Periods 167
5.7.3 Minimum Monthly Charge 167
5.7.4 Measuring Access Minutes 167
5.7.5 Off-Peak Periods 176

6. Special Access Service 177

6.1 General 177
6.1.1 Circuit Types 178
6.1.2 Rate Categories 180
6.1.3 Service Configurations 182
6.1.4 Design Layout Report 185
6.1.5 Acceptance Testing 185
6.1.6 Ordering Options and Conditions 186
6.1.7 Service Descriptions 186

(Continued)

ACCESS SERVICE

Table of Contents

Subject — Sheet No.

6. Special Access Service (Cont'd)

6.2 Rate Regulations 211
6.2.1 Types of Rates and Charges 212
6.2.2 Minimum Periods 213
6.2.3 Mileage Measurement 214
6.2.4 Facility Hubs 215

7. Additional Engineering, Additional Labor, and Miscellaneous Services 217

7.1 Additional Engineering 218

7.2 Additional Labor 218
7.2.1 Overtime Installation 218
7.2.2 Overtime Repair 218
7.2.3 Standby 219
7.2.4 Testing and Maintenance with Other Telephone Companies 219
7.2.5 Testing Services 219
7.2.6 Other Labor 219

(Continued)

ACCESS SERVICE

Table of Contents

Subject — Sheet No.

7. Additional Engineering, Additional Labor, and Miscellaneous Services (Cont'd)

7.3 Miscellaneous Services 220
7.3.1 Maintenance of Access Service 220
7.3.2 Programming Service 220
7.3.3 Presubscription 221

8. Special Construction 227

8.1 General 227

8.2 Conditions Requiring Special Construction 227

9. Interface Groups, Transmission Specifications, and Channel Interfaces 228

9.1 Local Transport Interface Groups 228
9.1.1 Interface Group 1 229
9.1.2 Interface Group 2 230
9.1.3 Interface Group 3 231
9.1.4 Interface Group 4 232

(Continued)

ACCESS SERVICE

Table of Contents

Subject — Sheet No.

9. Interface Groups, Transmission Specifications, and Channel Interfaces (Cont'd)

9.1 Local Transport Interface Groups (Cont'd)
9.1.5 Interface Group 5 232
9.1.6 Interface Group 6 233
9.1.7 Interface Group 7 233
9.1.8 Interface Group 8 234
9.1.9 Interface Group 9 234
9.1.10 Interface Group 10 235
9.1.11 Available Premises Interface Codes 235
9.1.12 Supervisory Signaling 240

9.2 Transmission Specifications Switched Access Service 241
9.2.1 Standard Transmission Specifications 242
9.2.2 Data Transmission Parameters 252

9.3 Special Access Channel Interface and Network Channel Codes 256
9.3.1 Glossary of Channel Interface Codes and Options 257
9.3.2 Impedance 263
9.3.3 Digital Hierarchy Channel Interface Codes (4DS) 264
9.3.4 Service Designator/Network Channel Code Conversion Table 264
9.3.5 Compatible Channel Interfaces 267

(Continued)

ACCESS SERVICE

Table of Contents

Subject	Sheet No.	
10. Rates and Charges	284	
10.1 General	284	
10.2 Albion Telephone Company	285	
10.2.1 Switched Access Service	285	
10.2.1 Carrier Common Line Access Service	286	
10.2.2 Special Access Service	286	
10.2.3 Miscellaneous Services	291	
10.3 Cambridge Telephone Company	294	
10.3.1 Switched Access Service	294	
10.3.1 Carrier Common Line Access Service	295	
10.3.2 Special Access Service	295	
10.3.3 Miscellaneous Services	300	
10.4 Columbine Telephone Company, Inc., d.b.a. Silver Star Communications	303	(T)
10.4.1 Switched Access Service	303	
10.4.1 Carrier Common Line Access Service	304	
10.4.2 Special Access Service	304	
10.4.3 Miscellaneous Services	307	

(Continued)

ACCESS SERVICE

Table of Contents

Subject | Sheet No.

10. Rates and Charges (Cont'd)

10.5 Custer Telephone Cooperative, Inc. 309
10.5.1 Switched Access Service 309
10.5.1 Carrier Common Line Access Service 310
10.5.2 Special Access Service 310
10.5.3 Miscellaneous Services 315.2

10.6 Direct Communications Rockland, Inc. 317
10.6.1 Switched Access Service 317
10.6.1 Carrier Common Line Access Service 318
10.6.2 Special Access Service 318
10.6.3 Miscellaneous Services ..... 323 (D)
(D)

10.7 Farmers Mutual Tele. Company 327
10.7.1 Switched Access Service 327
10.7.1 Carrier Common Line Access Service 328
10.7.2 Special Access Service 328
10.7.3 Miscellaneous Services 333

(Continued)

ACCESS SERVICE

Table of Contents

Subject | Sheet No.

10. Rates and Charges (Cont'd)

10.8 Filer Mutual Telephone Company..... 335
10.8.1 Switched Access Service..... 335
10.8.1 Carrier Common Line Access Service 336
10.8.2 Special Access Service 336
10.8.3 Miscellaneous Services 341

10.9 Fremont Telcom Co..... 343
10.9.1 Switched Access Service..... 343
10.9.1 Carrier Common Line Access Service 344
10.9.2 Special Access Service 344
10.9.3 Miscellaneous Services 355

10.10 Inland Telephone Company 357
10.10.1 Switched Access Service..... 357
10.10.1 Carrier Common Line Access Service 358
10.10.2 Special Access Service 358
10.10.3 Miscellaneous Services 363

10.10.1 Midvale Telephone Exchange, Inc. ..... 364.1 (N)
10.10.1.1 Switched Access Service..... 364.1
10.10.1.1 Carrier Common Line Access Service 364.2
10.10.1.2 Special Access Service..... 364.2
10.10.1.3 Miscellaneous Services ..... 364.7 (N)

(Continued)

ACCESS SERVICE

Table of Contents

Subject | Sheet No.

10. Rates and Charges (Cont'd)

10.11 Mud Lake Telephone Cooperative Association, Inc. 365
10.11.1 Switched Access Service 365
10.11.1 Carrier Common Line Access Service 366
10.11.2 Special Access Service 366
10.11.3 Miscellaneous Services 371

10.12 Potlatch Telephone Company, Inc. 373
10.12.1 Switched Access Service 373
(D)
10.12.2 Special Access Service 375
10.12.3 Miscellaneous Services 380

10.13 Project Mutual Telephone Cooperative Association, Inc. 382
10.13.1 Switched Access Service 382
10.13.1 Carrier Common Line Access Service 383
(D)
10.13.2 Special Access Service 383
10.13.3 Miscellaneous Services 388

(Continued)

ACCESS SERVICE

Table of Contents

Subject | Sheet No.

10. Rates and Charges (Cont'd)

10.14 Rural Telephone Company 390
10.14.1 Switched Access Service 390
10.14.1 Carrier Common Line Access Service ..... 390.3 (T)
10.14.2 Special Access Service 391
10.14.3 Miscellaneous Services 396

10.15 (D)
(D)

10.16 Reserved for Future Use

(Continued)

ACCESS SERVICE

Concurring Carriers

No concurring carriers

Connecting Carriers

No connecting carriers

Other Participating Carriers

No other participating carriers

Registered Service Trademarks

None

Registered Trademarks

None

(Continued)

ACCESS SERVICE

Explanation of Symbols

(R) - to signify reduction.
(I) - to signify increase.
(C) - to signify changed regulation.
(T) - to signify a change in text but no change in rate or regulation.
(S) - to signify reissued matter.
(M) - to signify matter relocated without change.
(N) - to signify new rate or regulation.
(D) - to signify discontinued rate or regulation.
(Z) - to signify a correction.

Explanation of Abbreviations

ac -Alternating current
ANI -Automatic Number Identification
ASR -Access Service Request
AT&T -American Telephone and Telegraph Company

BD -Business Day
BHMC -Busy Hour Minutes of Capacity

CCITT -Consultative Committee on International Telegraphy and Telephony
CCS -Common Channel Signaling
CCSA -Common Control Switching Arrangement
CCSAC -Common Channel Signaling Access Capability
CCSN -Common Channel Signaling Network
CDP -Customer Designated Premises

(Continued)

ACCESS SERVICE

Explanation of Abbreviations

CI	-Channel Interface
CM	-Circuit Mileage
CNP	-Charge Number Parameter
CO	-Central Office
Cont'd	-Continued
CPE	-Customer Premises Equipment
CPN	-Calling Party Number
CSP	-Carrier Selection Parameter
CSU	-Channel Service Unit
C-SWC	-Customer Serving Wire Center
CT	-Circuit Termination
DA	-Directory Assistance
dB	-decibel
dc	-direct current
EPL	-Echo Path Loss
ESS	-Electronic Switching System
ESSX	-Electronic Switching System Exchange
f	-frequency
F.C.C.	-Federal Communications Commission
FX	-Foreign Exchange
Hz	-Hertz

(Continued)

ACCESS SERVICE

Explanation of Abbreviations

IC	-Interexchange Carrier
ICB	-Individual Case Basis
IPUC	-Idaho Public Utilities Commission
kbps	-kilobits per second
kHz	-kilohertz
LATA	-Local Access and Transport Area
MMUC	-Minimum Monthly Usage Charge
MRC	-Monthly Recurring Charge
MTS	-Message Telecommunications
NTCA	-Non-Conversation Time Additive
NPA	-Numbering Plan Area
NRC	-Nonrecurring Charge
NTS	-Non-Traffic Sensitive
NXX	-Three-Digit Central Office Code
ONAL	-Off Network Access Line
PAL	-Public Access Line
PBX	-Private Branch Exchange
PCM	-Pulse Code Modulation
PIC	-Primary Interexchange Carrier
POT	-Point of Termination
PSP	-Payphone Service Provider

(Continued)

ACCESS SERVICE

Explanation of Abbreviations

SAC	-Service Access Code
SCP	-Service Control Point
SF	-Single Frequency
SNAL	-Signaling Network Access Link
SP	-Signaling Point
SPOI	-Signaling Point of Interface
SRL	-Singing Return Loss
SSN	-Switched Service Network
SS7	-Signaling System 7
SSP	-Service Switching Point
STP	-Signaling Transfer Point
TELEX	-A worldwide switched message service
TSPS	-Traffic Service Position System
TV	-Television
USOC	-Uniform Service Order Code
VG	-Voice Grade
V&H	-Vertical & Horizontal
WATS	-Wide Area Telecommunications Service(s)

(Continued)

ACCESS SERVICE

Reference to Other Tariffs

Whenever reference is made in this tariff to other tariffs of the Issuing Carriers, the reference is to the tariffs in force as of the effective date of this tariff, and to amendments thereto and successive issues thereof.

Use of the Tariff

This tariff contains the regulations, rates, and charges applicable to the provision of Access Service by all the Issuing Carriers listed on Sheet No. 1.

The regulations applicable to the provision of Access Service are contained in Sections 2 through 9. These regulations are identical for all Issuing Carriers.

Each specific Carrier's rates and charges for all Access Services are shown in Section 10. If an Issuing Carrier does not presently have an approved rate for one of the rate elements shown in Section 10, the rate is shown as "Not Applicable" (N/A). Upon receipt of an order by a customer for the service not presently offered, the Issuing Carrier will file the appropriate information necessary to establish rates. The Special Access Service rate elements will show ".00" if there is no nonrecurring charge.

To find the specific rate for an Issuing Carrier, go to the Table of Contents and locate the Sheet Number.

(Continued)

ACCESS SERVICE

Use of the Tariff

Tariff Sheet Format

Sheet Numbering

Sheet numbers are numbered sequentially. When a new sheet must be added between existing sheets, a decimal and number is added to the sheet number, to sequentially number the new sheet. For example, a new sheet between existing sheets 20 and 21 would be numbered 20.1. A new sheet added between sheets 18.1 and 18.2 would be numbered 18.1.1.

Sheet Revision Numbering

The number is the most recent sheet revision on file with the Commission. Due to Notice Periods, and changes in Effective Dates, the most recent sheet on file with the Commission may not be in effect. Consult the Effective Date on a specific sheet and Check Sheets to determine if that sheet is in effect.

Issued Date

The Issued Date on each tariff sheet is the date that page was filed with the Commission.

Effective Date

The Effective Date is the date the sheet is scheduled to go into effect (at 12:01 a.m. on that date). The effective date may be changed by either reissuing the sheet or by issuing a tariff supplement to change the effective date without reissuing the sheet.

(Continued)

ACCESS SERVICE

Use of the Tariff

Tariff Sheet Format (Cont'd)

Tariff Section Numbering

An alpha-numeric numbering plan is used to number tariff regulations and rates. Each level is subordinate to and dependent on its next higher level. An example of the numbering sequence follows:

6.
6.2
6.2.1
6.2.1(B)
6.2.1(B)(2)
6.2.1(B)(2)(a)
6.2.1(B)(2)(a)(i)

Contact Information

A copy of this tariff is on file at 277 North Sixth Street, Suite 200, Park Place, Boise, ID 83701, which is the office of Conley E. Ward at Givens Pursley LLP. All inquiries can be directed to Conley E. Ward at 208.388.1219 or faxed to 208.388.1300 or Lorrie Bernstein at 209.955.6103 or faxed to 209.955.6199 or e-mail lorrieb@mossadams.com.

(Continued)

ACCESS SERVICE

Reference to Technical Publications

Please contact Cynthia A. Melillo at 208.577.5747 or Lorrie Bernstein at 209.955.6103 concerning any technical publications referenced in this tariff and they will tell you how you can purchase this material. (T)

1. Application of Tariff

1.1 This tariff contains regulations, rates, and charges applicable to the provision of Carrier Common Line, Switched Access, and Special Access Services, and other miscellaneous services, hereinafter referred to collectively as service(s), provided by the Issuing Carriers of this tariff hereinafter referred to as the Company, to the customer(s).

1.2 The provision of such services by the Company as set forth in this tariff does not constitute a joint undertaking with the customer for the furnishing of any service.

1.3 This tariff is applicable to Intrastate Access Service for wire centers identified in the National Exchange Carrier Association, Inc. Tariff F.C.C. No. 4.

2. General Regulations

2.1 Undertaking of the Telephone Company

2.1.1 Scope

(A) The Company does not undertake to transmit messages under this tariff

(B) The Company shall be responsible only for the installation, operation, and maintenance of the services it provides.

(Continued)

ACCESS SERVICE

2. General Regulations (Cont'd)

2.1 Undertaking of the Telephone Company (Cont'd)

2.1.1 Scope (Cont'd)

(C) The Company will, for maintenance purposes, test its services only to the extent necessary to detect and/or clear troubles.

(D) Services are provided 24 hours daily, seven days per week, except as set forth in other sections of this tariff.

(E) The Company does not warrant that its facilities and services meet standards other than those set forth in this tariff.

2.1.2 Limitations

(A) The customer may assign or transfer the use of services under this tariff if there is no interruption in or relocation of services. The assignee or transferee must agree to assume all outstanding indebtedness for services provided under this tariff and any termination liability associated with the services provided. The customer will remain jointly liable with the assignee or transferee for any obligations existing at the time of the assignment.

Prior to assignment, the Company must acknowledge in writing that all requirements have been met. Acknowledgement will be made within fifteen (15) days after the Company has been notified of the proposed assignment.

(Continued)

ACCESS SERVICE

2. General Regulations (Cont'd)

2.1 Undertaking of the Telephone Company (Cont'd)

2.1.2 Limitations (Cont'd)

(B) All services offered in this tariff will be provided on a first-come first-served basis. The use and restoration of services shall be in accordance with Part 64, Subpart D, Appendix A of the F.C.C. Rules and Regulations.

2.1.3 Liability

(A) Except in the case of willful misconduct for which the Company's liability is not limited by this tariff, the Company's liability for damages shall not exceed an amount equal to the proportionate tariff charge for the period during which the service was affected. This liability for damages shall be in addition to any amounts that may be due the customer as described in Section 2.4.3.

(B) The Company shall not be liable for any act or omission of any other carrier or customer providing a portion of a service, nor shall the Company for its own act or omission hold liable any other carrier or customer providing a portion of a service.

(C) The Company is not liable for damages to the customer premises resulting from the furnishing of a service, including the installation and removal of equipment and associated wiring, unless the damage is caused by the Company's negligence.

(Continued)

ACCESS SERVICE

2. General Regulations (Cont'd)

2.1 Undertaking of the Telephone Company (Cont'd)

2.1.3 Liability (Cont'd)

(D) The Company shall be indemnified, defended, and held harmless by the end user against any claim, loss, or damage arising from the end user's use of services offered under this tariff, involving:

(1) Claims for libel, slander, invasion of privacy, or infringement of copyright arising from the end user's own communications;

(2) Claims for patent infringement arising from the end user's acts combining or using the service furnished by the Company in connection with facilities or equipment furnished by the end users or IC or;

(3) All other claims arising out of any act or omission of the end user in the course of using services provided pursuant to this tariff.

(E) The Company shall be indemnified, defended, and held harmless by the IC against any claim, loss, or damage arising from the IC's use of services offered under this tariff involving;

(1) Claims for libel, slander, invasion of privacy, or infringement of copyright arising from the IC's own communications;

(Continued)

ACCESS SERVICE

2. General Regulations (Cont'd)

2.1 Undertaking of the Telephone Company (Cont'd)

2.1.3 Liability (Cont'd)

(E) (Cont'd)

(2) Claims for patent infringement arising from the IC's acts combining or using the service furnished by the Company in connection with facilities or equipment furnished by the end user or IC or;

(3) All other claims arising out of any act or omission of the IC in the course of using services provided pursuant to this tariff.

(F) The Company's failure to provide or maintain services under this tariff shall be excused by labor difficulties, governmental orders, civil commotions, criminal actions taken against the Company, acts of God and other circumstances beyond the Company's reasonable control, subject to the Credit Allowance for a Service Interruption as set forth in 2.4.3 following.

(G) The included tariff language does not constitute a determination by the Commission that a limitation of liability imposed by the Company should be upheld in a court of law. Acceptance for filing by the Commission recognizes that it is a court's responsibility to adjudicate negligence and consequential damage claims. It is also the court's responsibility to determine the validity of the exculpatory clause.

(Continued)

ACCESS SERVICE

2. General Regulations (Cont'd)

2.1 Undertaking of the Telephone Company (Cont'd)

2.1.4 Provision of Services

The Company's obligation to furnish the services described in this tariff is dependent upon its ability to provide such service after provision has been made for the Company's exchange services.

2.1.5 Installation and Termination of Services

The services provided under this tariff (A) will include any entrance cable or drop wiring and wire or intrabuilding cable to that point where provision is made for termination of the Company's outside distribution network facilities at a suitable location inside a customer-designated premises and (B) will be installed by the Company to such Point of Termination. Wire required within a building to extend Access Service facilities will be provided, at the customer's request, on a time sensitive charge basis. The labor rates for the installation of such wire are the same as those set forth in Section 10, Miscellaneous Services under Additional Labor.

2.1.6 Maintenance of Services

The services provided under this tariff shall be maintained by the Company. The customer or others may not rearrange, move, disconnect, remove, or attempt to repair any facilities provided by the Company, other than by connection or disconnection to any interface means used, except with the written consent of the Company.

(Continued)

ACCESS SERVICE

2. General Regulations (Cont'd)

2.1 Undertaking of the Telephone Company (Cont'd)

2.1.7 Changes and Substitutions

Except as provided for equipment and systems subject to FCC Part 68 Regulations at 47 C.F.R. section 68.110(b), the Company may, where such action is reasonably required in the operation of its business, (A) change any facilities used in providing service under this tariff, (B) change minimum protection criteria, (C) change operating or maintenance characteristics of facilities or (D) change operations or procedures of the Company. The Company shall not be responsible if the change renders customer furnished services obsolete or requires modification of the customer furnished services. If such change materially affects the operating characteristics of the facility, the Company will provide reasonable notification to the customer in writing. Reasonable time will be allowed for any redesign and implementation required by the changes made. The Company will work cooperatively with the customer to determine reasonable notification procedures.

2.1.8 Refusal and Discontinuance of Service

(A) Unless the provisions of 2.2.1(B) or 2.5 following apply, if a customer fails to comply with 2.1.6 preceding or 2.2.2, 2.3.1, 2.3.4, 2.3.5, or 2.4 following, including any payments to be made by it on the dates and times herein specified, the Company may on thirty (30) day's written notice by Certified U.S. Mail to the person designated by that customer to receive such notices of non-compliance, refuse additional applications for service and/or refuse to complete any pending orders for service by the non-complying customer at any time thereafter.

(Continued)

ACCESS SERVICE

2. General Regulations (Cont'd)

2.1 Undertaking of the Telephone Company (Cont'd)

2.1.8 Refusal and Discontinuance of Service (Cont'd)

(A) (Cont'd)

If the Company does not refuse additional applications for service on the date specified in the thirty (30) day's notice, and the customer's non-compliance continues, nothing contained herein shall preclude the Company's right to refuse additional applications for service to the non-complying customer without further notice.

(B) Unless the provisions of 2.2.1(B) or 2.5 following apply, if a customer fails to comply with 2.1.6 preceding or 2.2.2, 2.3.1, 2.3.4, 2.3.5, or 2.4 following, including any payments to be made by it on the dates and times herein specified, the Company may, on thirty (30) day's written notice by Certified U.S. Mail to the person designated by that customer to receive such notices of non-compliance, discontinue the provision of the services to the non-complying customer at any time thereafter. In the case of such discontinuance, all applicable charges, including termination charges, shall become due. If the Company does not discontinue the provision of the services involved on the date specified in the thirty (30) day's notice, and the customer's non-compliance continues, nothing contained herein shall preclude the Company's right to discontinue the provision of the services to the non-complying customer without further notice.

(Continued)

ACCESS SERVICE

2. General Regulations (Cont'd)

2.1 Undertaking of the Telephone Company (Cont'd)

2.1.8 Refusal and Discontinuance of Service (Cont'd)

(C) When access service is provided by more than one Company, the companies involved in providing the joint service may individually or collectively deny service to a customer for non-payment. Where the Company(s) affected by the non-payment is/are incapable of effecting discontinuance of service without cooperation from the other joint providers of Switched Access Service, such other Company(s) will, if technically feasible, assist in denying the joint service to the customer. Service denial for such joint service will only include calls originating or terminating within, or transiting, the operating territory of the Companies initiating the service denial for non-payment. When more than one of the joint providers must deny service to effectuate termination for non-payment, in cases where a conflict exists in the applicable tariff provisions, the tariff regulations of the end office Company shall apply for joint service discontinuance.

2.1.9 Limitation of Use of Metallic Facilities

Signals applied to a metallic facility shall conform to the limitations set forth in Technical Reference Publication AS No. 1. Where necessary, the customer shall be responsible for the provision of current limiting devices to protect the Company facilities from excessive current due to abnormal conditions and for the provisions of noise mitigation networks when required to reduce excessive noise.

(Continued)

ACCESS SERVICE

2. General Regulations (Cont'd)

2.1 Undertaking of the Telephone Company (Cont'd)

2.1.10 Notification of Service-Affecting Activities

The Company will provide the customer reasonable notification of service-affecting activities that may occur in normal operation of its business. Such activities may include, but are not limited to, equipment additions, removals, and routine preventative maintenance. Generally, such activities are not individual customer service specific, they affect many customer services. No specific advance notification period is applicable to all service activities. The Company will work cooperatively with the customer to determine the notification requirements.

2.1.11 Provision and Ownership of Telephone Numbers

The Company reserves the reasonable right to assign, designate, or change telephone numbers associated with Access Services, or the Company serving central office prefixes associated with such numbers, when necessary in the conduct of its business. Should it become necessary to make a change, the Company will furnish to the customer 6 months notice, by certified mail, of the effective date and an explanation of the reason(s) for such change(s).

(Continued)

ACCESS SERVICE

2. General Regulations (Cont'd)

2.1 Undertaking of the Telephone Company (Cont'd)

2.1.12 Coordination with Respect to Network Contingencies

The Company intends to work cooperatively with the customer to develop network contingency plans in order to maintain maximum network capability following natural or man-made disasters which affect telecommunications services.

2.2 Use

2.2.1 Interference or Impairment

(A) The facilities and equipment provided by the customer which are used in conjunction with Company facilities in the provision of Access Service shall not interfere with or impair the provision of service by the Company.

(B) If interference as described in (A) above exists, except for equipment subject to the F.C.C. Part 68 rules in 47 C.F.R. Section 68.108, when practicable, the Company will notify the customer that service will be temporarily disconnected until the problem is corrected. When prior notice is not practical, the Company may temporarily disconnect services without prior notification to the customer. The customer will be notified of the action as soon as possible and given the opportunity to correct the problem. During the period of discontinuance, the credit allowance for service interruptions as set forth in 2.4.3 following does not apply.

(Continued)

ACCESS SERVICE

2. General Regulations (Cont'd)

2.2 Use (Cont'd)

2.2.2 Unlawful Use

The service provided under this tariff shall not be used for an unlawful purpose.

2.3 Obligations of the Customer

2.3.1 Damages

The customer shall reimburse the Company for damages to the Company facilities utilized to provide services under this tariff caused by the negligence or willful act of the customer, or resulting from the customer's improper use of the Company facilities, or due to malfunction of any facilities or equipment provided by other than the Company. Nothing in the foregoing provision shall be interpreted to hold one customer liable for another customer's actions. The Company will, upon reimbursement for damages, cooperate with the customer in prosecuting a claim against the person causing such damage and the customer shall be subrogated to the right of recovery by the Company for the damages to the extent of such payment.

(Continued)

ACCESS SERVICE

2. General Regulations (Cont'd)

2.3 Obligations of the Customer (Cont'd)

2.3.2 Ownership of Facilities

Facilities utilized by the Company to provide service under the provisions of this tariff shall remain the property of the Company. Such facilities shall be returned to the Company by the customer, whenever requested, within a reasonable period following the request in as good condition as reasonable wear will permit. Any cost of repair or replacement for unreasonable wear or damage will be billed to the customer who utilized the equipment.

2.3.3 Equipment Space and Power

The customer shall furnish or arrange to have furnished to the Company, at no charge, equipment space and electrical power required by the Company to provide services under this tariff at the points of termination of such services. The selection of ac or dc power shall be mutually agreed to by the customer and the Company. The customer shall also make necessary arrangements in order that the Company will have access to such space at reasonable times for installing, testing, repairing, or removing Company services.

2.3.4 Availability for Testing

The services provided under this tariff shall be available to the Company at times mutually agreed upon in order to permit the Company to make tests and adjustments appropriate for maintaining the services in satisfactory operating condition. Such tests and adjustments shall be completed within a reasonable time. No credit will be allowed for any interruptions involved during such tests and adjustments.

(Continued)

ACCESS SERVICE

2. General Regulations (Cont'd)

2.3 Obligations of the Customer (Cont'd)

2.3.5 Balance

All signals for transmission over the services provided under this tariff shall be delivered by the customer balanced to ground except for ground start, duplex (DX) signaling and McCulloh-Loop (Alarm System) type signaling and dc telegraph transmission at speeds of 75 baud or less.

2.3.6 Design of Customer Services

Subject to the provisions of 2.1.7 preceding, the customer shall be solely responsible, at its own expense, for the overall design of its services and for any redesigning or rearrangement of its services which may be required because of changes in facilities, operations, or procedures of the Company, minimum protection criteria or operating or maintenance characteristics of the facilities.

2.3.7 Reference to the Telephone Company

The customer may advise the end user that certain services are provided by the Company in connection with the service the customer furnishes to the end user; however, the customer shall not represent that the Company jointly participates in the customer's services.

(Continued)

ACCESS SERVICE

2. General Regulations (Cont'd)

2.3 Obligations of the Customer (Cont'd)

2.3.8 Claims and Demands for Damages

The customer shall defend, indemnify, and hold harmless the Company from and against any suits, claims, losses, or damages, including punitive damages, attorney fees, and court costs by third persons arising out of the construction, installation, operation, maintenance, or removal of the customer's circuits, facilities, or equipment connected to the Company's services provided under this tariff, including, without limitation, Workmen's Compensation claims, actions for infringement of copyright and/or unauthorized use of program material, libel, and slander actions based on the content of communications transmitted over the customer's circuits, facilities, or equipment, and proceedings to recover taxes, fines, or penalties for failure of the customer to obtain or maintain in effect any necessary certificates, permits, licenses, or other authority to acquire or operate the services provided under this tariff; provided, however, the foregoing indemnification shall not apply to suits, claims, and demands to recover damages for damage to property, death, or personal injury unless such suits, claims, or demands are based on the tortuous conduct of the customer, its officers, agents, or employees. The customer shall defend, indemnify and hold harmless the Company from and against any suits, claims, losses , or damages, including punitive damages, attorney fees, and court costs by the customer or third parties arising out of any act or omission of the customer in the course of using services provided under this tariff.

(Continued)

ACCESS SERVICE

2. General Regulations (Cont'd)

2.3 Obligations of the Customer (Cont'd)

2.3.9 Jurisdictional Report Requirements

(A) Jurisdictional Requirements

Pursuant to I.P.U.C. Order No. 21433 issued September 1, 1987, interstate and intrastate usage is to be developed as though every call that is originated by a calling party in Idaho and terminated to a called party in Idaho is an intrastate communication.

Every call that is originated by a calling party in the state and terminated to a called party in another state, or vice versa, is an interstate communication. This is true regardless of where the call is routed between the point of origin and the point of termination.

(1) Feature Group A (FGA) or Feature Group B (FGB) Service

(a) Definitions

(i) FGA provides line side access to a Company's end office with an associated seven-digit local telephone number for use by the Interexchange Carrier (IC) and the IC's customers use in originating and terminating communications.

(ii) FGB is provided through a seven-digit access code (950-XXXX) in lieu of a local business line number.

(Continued)

ACCESS SERVICE

2. General Regulations (Cont'd)

2.3 Obligations of the Customer (Cont'd)

2.3.9 Jurisdictional Report Requirements (Cont'd)

(A) Jurisdictional Requirements (Cont'd)

(1) Feature Group A (FGA) or Feature Group B (FGB) Service (Cont'd)

(b) When a customer orders FGA and/or FGB Switched Access Service, the customer shall state in its order the projected interstate and intrastate percentage usage for each FGA and/or FGB Switched Access Service group ordered. If a customer discontinues some but not all of the FGA and/or FGB Switched Access Services in a group, it shall provide the projected interstate and intrastate percentage for the remaining part of the group.

(c) The projected interstate and intrastate percentages will be used by the Company to apportion the usage between interstate and intrastate until a revised report is received as set forth in 2.3.9(B)(2).

(d) For multi-line hunt group or trunk group arrangements where either the interstate or the intrastate charges are based on measured usage, the intrastate FGA and/or FGB Switched Access Service(s) information report as set forth in (1)(c) preceding will be used to determine the charges.

(Continued)

ACCESS SERVICE

2. General Regulations (Cont'd)

2.3 Obligations of the Customer (Cont'd)

2.3.9 Jurisdictional Report Requirements (Cont'd)

(A) Jurisdictional Requirements (Cont'd)

(1) Feature Group A (FGA) or Feature Group B (FGB) Service (Cont'd)

(e) For all groups the number of access minutes (either measured or assumed) for a group will be multiplied by the projected interstate percentage to develop the interstate access minutes. The number of access minutes for the group minus the developed interstate access minutes for the group will be the developed intrastate access minutes.

(2) Feature Group C (FGC) or Feature Group D (FGD) Service

(a) Originating FGC or FGD Service

When a customer orders FGC or FGD Switched Access Service(s), where the jurisdiction is determined from the call detail, the Company will develop the projected Percent Interstate Usage (PIU) factor according to such jurisdiction. The projected interstate percentage is developed on a monthly basis, by end office, when the originating FGC or FGD access minutes are measured, by dividing the measured interstate originating access minutes by the total originating access minutes.

(Continued)

ACCESS SERVICE

2. General Regulations (Cont'd)

2.3 Obligations of the Customer (Cont'd)

2.3.9 Jurisdictional Report Requirements (Cont'd)

(A) Jurisdictional Requirements (Cont'd)

(2) Feature Group C (FGC) or Feature Group D (FGD) Service (Cont'd)

(b) Terminating FGC Service

When a customer orders terminating FGC Switched Access Service, the data used by the Company to develop the projected Percent Interstate Usage (PIU) factor for originating FGC access minutes is used to develop the projected PIU factor for such terminating access minutes. When originating call details are insufficient to determine the jurisdiction for the call, the customer may supply the projected PIU factor or authorize the Company to use the Company developed percentage for such call detail. The Company will designate the number obtained by subtracting the projected PIU factor for originating and terminating access minutes calculated by the Company from 100 (100 - Company calculated projected interstate percentage = intrastate percentage) as the intrastate percentage of use.

(Continued)

ACCESS SERVICE

2. General Regulations (Cont'd)

2.3 Obligations of the Customer (Cont'd)

2.3.9 Jurisdictional Report Requirements (Cont'd)

(A) Jurisdictional Requirements (Cont'd)

(2) Feature Group C (FGC) or Feature Group D (FGD) Service (Cont'd)

(c) Terminating FGD Service

When a customer orders terminating FGD, if the Company has sufficient call details to determine the jurisdiction for the call, the Company will bill the call minutes of use according to that jurisdiction.

When terminating call details are insufficient to determine the jurisdiction for the call, the customer may supply the projected Percent Interstate Usage (PIU) factor. The Company will designate the number obtained by subtracting the projected PIU factor for terminating access minutes from 100 (100 - projected interstate percentage = intrastate percentage) as the intrastate percentage of use. When terminating call details are insufficient to determine the jurisdiction, and the customer does not supply a projected PIU factor, calls will be billed using a PIU of 50 (50% interstate - 50% intrastate).

(Continued)

ACCESS SERVICE

2. General Regulations (Cont'd)

2.3 Obligations of the Customer (Cont'd)

2.3.9 Jurisdictional Report Requirements (Cont'd)

(A) Jurisdictional Requirements (Cont'd)

(3) Special Access

When the customer orders Special Access Service, and the customer certifies to the Company in writing that more than ten percent of the traffic is interstate, the service is considered to be interstate. Following initial certification, should the jurisdictional nature of the customer's Special Access Service change, the customer should inform the Company in writing of the change. The effective date of the change will be the date the Company receives the customer's notice of change. No charge applies for the jurisdictional change. Disputes involving Special Access Jurisdictional Certification will be resolved as specified in (C)(2), following.

(B) Jurisdictional Reports

(1) Except where the Company measured access minutes are used as set forth in (A)(2), preceding, the customer reported interstate and intrastate percentage of use as set forth in (A)(1) or (A)(2), preceding, will be used until the customer reports a different projected interstate and intrastate percentage for an in service end office group. When the customer adds or

(Continued)

ACCESS SERVICE

2. General Regulations (Cont'd)

2.3 Obligations of the Customer (Cont'd)

2.3.9 Jurisdictional Report Requirements (Cont'd)

(B) Jurisdictional Reports (Cont'd)

(1) (Cont'd)

discontinues BHMC, lines or trunks to an existing end office group, the customer shall furnish a projected interstate and intrastate percentage that applies to the remaining BHMC, lines or trunks. The revised report will serve as the basis for future billing and will be effective on the next bill date. No prorating or back billing will be done based on the report.

(2) Effective on the first of January, April, July, and October of each year the customer shall update the interstate and intrastate jurisdictional report. The customer shall forward to the Company, to be received no later than fifteen (15) days after the first of each such month, a revised report showing the interstate and intrastate percentage of use for the past three months ending the last day of December, March, June, and September, respectively, for each service arranged for interstate use. Additionally, where the customer utilizes FGA Switched Access Service for calls between a Primary Exchange Carrier and a Secondary Exchange Carrier within

(Continued)

ACCESS SERVICE

2. General Regulations (Cont'd)

2.3 Obligations of the Customer (Cont'd)

2.3.9 Jurisdictional Report Requirements (Cont'd)

(B) Jurisdictional Reports (Cont'd)

(2) (Cont'd)

the same Extended Area Service calling area, and/or Feature Group B Switched Access Service for calls between a Primary Exchange Carrier's access tandem and a subtending Secondary Exchange Carrier, where the Primary and Secondary Exchange Carriers are not the same Company and do not provide service under the same access service tariff, a copy of the revised report will be provided by the customer to each Secondary Exchange Carrier. The revised report will serve as the basis for the next three months billing and will be effective on the bill date for that service. No prorating or back billing will be done based on the report. However, delayed charges will be billed issuing the interstate and intrastate percentage that was in effect at the time charges were incurred. When the quarterly reports are not supplied by the customer, the following steps, as set forth in (a) through (f), following, will be taken by the Company.

(Continued)

ACCESS SERVICE

2. General Regulations (Cont'd)

2.3 Obligations of the Customer (Cont'd)

2.3.9 Jurisdictional Report Requirements (Cont'd)

(B) Jurisdictional Reports (Cont'd)

(2) (Cont'd)

(a) If the customer does not supply the reports, the Company will assume the percentages to be the same as those provided in the last quarterly report. For those cases in which a quarterly report has never been received from the customer, the Company will assume the percentages to be the same as those provided in the order for service as set forth in (A)(1) or (A)(2), preceding.

(b) If no report is received by the date specified, the Company will send a letter to the customer (by certified U.S. Mail, return receipt requested) requesting an updated interstate percentage within thirty (30) days and reminding them that if no report is received, the procedures set forth in (c) following, will begin.

(Continued)

ACCESS SERVICE

2. General Regulations (Cont'd)

2.3 Obligations of the Customer (Cont'd)

2.3.9 Jurisdictional Report Requirements (Cont'd)

(B) Jurisdictional Reports (Cont'd)

(2) (Cont'd)

(c) If no report is received within thirty (30) days, the Company may develop an interstate percentage based upon customer specific data or designate a fifty percent (50%) interstate percentage beginning with the next billing period. This interstate percentage will be applied until an updated PIU report is submitted or until the provisions set forth in (d) or (e), following, are met. The Company will send a letter to the customer (by certified U.S. Mail, return receipt requested) requesting the work papers and summary, as described in B(1)(i), following, used by the customer to substantiate the most recent interstate percentage. The requested information must be submitted by the customer to the Company within thirty (30) days after receipt of the certified letter.

(d) Upon receipt of the customer's work papers and summary, the Company will begin using the interstate percentage derived from the work papers and summary with the next billing period and will review the work papers and summary submitted within thirty (30) days from receipt of the information.

(Continued)

ACCESS SERVICE

2. General Regulations (Cont'd)

2.3 Obligations of the Customer (Cont'd)

2.3.9 Jurisdictional Report Requirements (Cont'd)

(B) Jurisdictional Reports (Cont'd)

(2) (Cont'd)

(e) If after review of the information, it is determined that a billing dispute exists, the Company will continue to use the derived interstate percentage and begin auditing procedures as set forth in (B)(1), following.

(3) The customer shall maintain and retain for a minimum of three years, complete detailed and accurate records, work papers and backup documentation in form and substance to evidence the percentage data provided to the Company as set forth in this section.

(4) Pursuant to I.P.U.C. Order No. 21662 issued December 17, 1987, Feature Group A and/or Feature Group B Switched Access Service customers shall arrange for the necessary recording and retention of call detail in order to audit and accurately report intrastate usage. These customers are required to provide to the Commission an audit report done by an independent outside auditor. The audit report shall be submitted annually on March 1st to the Commission.

(Continued)

ACCESS SERVICE

2. General Regulations (Cont'd)

2.3 Obligations of the Customer (Cont'd)

2.3.9 Jurisdictional Report Requirements (Cont'd)

(C) Jurisdictional Report Dispute and Auditing Procedures

If a billing dispute arises concerning the projected interstate percentage, the Company will ask the customer to provide the data the customer uses to determine the projected interstate percentage as described in (1) and (2) following.

(1) Switched Access Services

(a) If the Company questions the information provided by the customer in (B), preceding, the Company will send a letter to the customer (by certified U.S. Mail, return receipt requested) requesting that the customer contact the Company to discuss and explain their report within thirty (30) days of the Company's request.

(b) If no response is received from the customer, the Company will send a letter to the customer (by certified U.S. Mail, return receipt requested) requesting the work papers and summary as described in (i), following, used by the customer to substantiate the most recent interstate percentage. The requested information must be submitted by the customer to the Company within thirty (30) days after receipt of the certified letter.

(Continued)

ACCESS SERVICE

2. General Regulations (Cont'd)

2.3 Obligations of the Customer (Cont'd)

2.3.9 Jurisdictional Report Requirements (Cont'd)

(C) Jurisdictional Report Dispute and Auditing Procedures (Cont'd)

(1) Switched Access Services (Cont'd)

(c) If the customer submits the work papers and summary as requested in (b), preceding, the Company will review this information within thirty (30) days after receipt of the customer's information.

(d) If, after review of the documentation, the Company and the customer establish a revised interstate percentage, the Company will begin using that percentage with the next billing period.

(e) If the Company and the customer do not establish a revised interstate percentage, the Company will begin the procedures as set forth in (g), following.

(f) If no response is received from the customer, the Company will begin the auditing procedures as set forth in (g), following.

(Continued)

ACCESS SERVICE

2. General Regulations (Cont'd)

2.3 Obligations of the Customer (Cont'd)

2.3.9 Jurisdictional Report Requirements (Cont'd)

(C) Jurisdictional Report Dispute and Auditing Procedures (Cont'd)

(1) Switched Access Services (Cont'd)

(g) If the customer does not provide the work papers and/or summary in accordance with the provisions set forth in this tariff or if a billing dispute is not resolved from the submission of such work papers, the Company may request the actual call detail records or a statistically valid sample of such records, on a prospective basis, not to exceed a consecutive three (3) month period. The actual call detail records will be used to statistically substantiate the interstate percentage provided to the Company and the process by which it is developed. Such call detail records shall consist of calling information, including call terminating address (i.e. called number), call duration, the trunk group number(s), or access line number(s) over which the call is routed and the point at which the call enters the customer's network. The Company will not request such data more than once a year.

(Continued)

ACCESS SERVICE

2. General Regulations (Cont'd)

2.3 Obligations of the Customer (Cont'd)

2.3.9 Jurisdictional Report Requirements (Cont'd)

(C) Jurisdictional Report Dispute and Auditing Procedures (Cont'd)

(2) Jurisdictional Report Proprietary Information

The data the customers provide to the Company to support their interstate percentage are considered proprietary to the customer. The Company agrees to use and protect such information by exercising the same degree of care normally used to protect its own proprietary information.

2.3.10 Determination of Intrastate Charges for Mixed Interstate and Intrastate Switched Access Service

When mixed interstate and intrastate Switched Access Service is provided, all charges (i.e., nonrecurring, monthly and/or usage), will be prorated between interstate and intrastate. The percentage provided in the reports as set forth in 2.3.9, preceding, will serve as the basis for prorating the charges. The percentage of an Access Service to be charged as intrastate is applied in the following manner:

(A) For monthly and nonrecurring chargeable rate elements, multiply the percent intrastate use times the quantity of chargeable elements times the stated tariff rate per element.

(Continued)

ACCESS SERVICE

2. General Regulations (Cont'd)

2.3 Obligations of the Customer (Cont'd)

2.3.10 Determination of Intrastate Charges for Mixed Interstate and Intrastate Switched Access Service (Cont'd)

(B) For usage sensitive (i.e., access minutes and calls) chargeable rate elements, multiply the percent intrastate use times actual use times the stated tariff rate.

The intrastate percentage will change as revised usage reports are submitted as set forth in 2.3.9, preceding.

2.3.11 Identification and Rating of VoIP-PSTN Traffic (M)

VoIP-PSTN Traffic is defined as traffic exchanged between a Company end user and the customer in Time Division Multiplexing (TDM) format that originates and/or terminates in Internet Protocol (IP) format. This section governs the identification of VoIP-PSTN Traffic that is required to be compensated at interstate access rates unless the parties have agreed otherwise by the F.C.C. in its Report and Order in WC Dockets Nos. 10-90, etc., F.C.C. Release No. 11-161 (November 18, 2011) (F.C.C. Order) and Second Order on (T) Reconsideration. Specifically, this section establishes the method of (T) separating VoIP-PSTN Traffic from the customer's traditional intrastate access traffic, so that suchVoIP-PSTN Traffic can be billed in accordance with the (T) F.C.C. Order. (M)

Effective July 13, 2012, originating intrastate toll VoIP traffic will be billed (N) the intrastate originating intrastate access rates. These rates apply regardless of whether the call originates in TDM or IP format. Effective July 1, 2014, the rates for intrastate originating toll VoIP traffic must equal interstate originating access rates. (N)

(M) Material previously shown on Original Sheet No. 66.1.

(Continued)

ACCESS SERVICE

2. General Regulations (Cont'd)

2.3 Obligations of the Customer (Cont'd)

2.3.11 Identification and Rating of VoIP-PSTN Traffic (Cont'd) (T)

(M)
(M)

The relevant VoIP-PSTN Traffic identified in accordance with this tariff section that is originated on the Company's network that originates and/or terminates in IP format shall be billed for the period December 29, 2011 through July 12, 2012, at rates equal to the Company's applicable tariffed interstate originating switched access rates as specified in the Company's applicable federal access tariff as set forth in Company's F.C.C. Tariff (https://www.neca.org/cms400min/Neca_templates/Tariff_5_Landing_Page.aspx). ; for the period July 13, 2012 through June 30, 2014, such traffic shall be billed at rates equal to the Company's applicable tariffed intrastate originating switched access rates; and beginning July 1, 2014, such traffic shall be billed at rates equal to the Company's applicable tariffed interstate originating switched access rates as specified in the Company's applicable federal access tariff. (N) (N)

(D)
(D)

No inference should be taken that VoIP-PSTN Traffic occurring prior to the effective date of the F.C.C. Order is not subject to this tariff and Company intrastate access tariffs.

(M)
(M)

(M) Material now shown on 2nd Revised Sheet No. 66.
(M) 2.3.11(A)(1) now shown on 1st Revised Sheet No. 66.2

(Continued) (N)

ACCESS SERVICE

2. General Regulations (Cont'd)

2.3 Obligations of the Customer (Cont'd)

2.3.11 Identification and Rating of VoIP-PSTN Traffic (Cont'd) (T)

Albion, Cambridge, Columbine, Midvale, Project Mutual, Rural, and (D)
have intrastate access rates lower than the interstate rates; therefore, the PVU
would not be necessary. (N)

(A) Calculation and Application of Percent-VoIP- Usage Factors (M)

(1) The Company will determine the number of relevant VoIP-PSTN (T)
Traffic minutes of use (MOU) to which interstate rates will be
applied under 2.3.11, preceding, by applying a Percent VoIP Usage
(PVU) factor to the total terminating intrastate access MOU (T)
received by a Company end user and delivered to the customer. (T)(M)

(2) The customer will calculate and furnish to the Company a PVU
factor representing the percentage of the total intrastate access (T)
MOU that the customer terminates to the Company that was sent
and originated in IP format. (T)

(D)

(D)

(M) 2.3.11(A)(1) previously shown on Original Sheet No. 66.1.
(M) 2.3.11(A)(5) now shown on 1st Revised Sheet No. 66.3 as (3).

(Continued) (N)

ACCESS SERVICE

2. General Regulations (Cont'd)

2.3 Obligations of the Customer (Cont'd)

2.3.11 Identification and Rating of VoIP-PSTN Traffic (Cont'd) (T)

(A) Calculation and Application of Percent-VoIP- Usage Factors (Cont'd)

(3) The terminating PVU shall be based on information such as traffic studies, actual call detail or other relevant and verifiable information which will be provided to the Company upon request. (C)(M) (C)(M)

(4) The Company will apply the PVU factor to the total terminating intrastate access MOU received from the customer to determine the number of relevant VoIP-PSTN Traffic MOUs. (C) (C)

(5) If the customer does not furnish the Company with a PVU factor, the Company will utilize a PVU equal to zero. (T)

(B) Initial PVU Factors (T)

(1) The PVU factor will be implemented when received for those Companies whose intrastate rates are higher than the interstate rates. (T)

(D) (D)

(M) 2.3.11(A)(3)was previously shown on Original Sheet No. 66.2 as (5).

Continued

ACCESS SERVICE

2. General Regulations (Cont'd)

2.3 Obligations of the Customer (Cont'd)

2.3.11 Identification and Rating of VoIP-PSTN Traffic (Cont'd) (T)

(C) PVU Factor Updates

The customer may update the PVU factors quarterly using the method set forth in (A)(2), preceding. If the customer chooses to submit such updates, it shall forward to the Company, no later than 15 days after the first day of January, April, July and/or October of each year, revised PVU factors based on data for the prior three months, ending the last day of December, March, June and September, respectively. The revised PVU factors will serve as the basis for future billing and will be effective on the bill date of each such month and shall serve as the basis for subsequent monthly billing until superseded by new PVU factors. No prorating or back billing will be done based on the updated PVU factors. (T)

(D) PVU Factor Verification (T)

(1) Not more than twice in any year, the Company may request from the customer an overview of the process used to determine the PVU factors, the call detail records, description of the method for determining how the end user originates and terminates calls in IP format, and other information used to determine the customer's PVU factors furnished to the Company in order to validate the PVU factors supplied. The customer shall comply, and shall reasonably supply the requested data and information within 15 days of the Company's request.

Continued

ACCESS SERVICE

2. General Regulations (Cont'd) (N)

2.3 Obligations of the Customer (Cont'd)

2.3.11 Identification and Rating of VoIP-PSTN Traffic (Cont'd)

(D) PVU Factor Verification (Cont'd)

(2) The Company may dispute the Customer's PVU factor based upon:

- A review of the requested data and information provided by the customer
- The Company's reasonable review of other market information, F.C.C. reports on VoIP lines, such as F.C.C. Form 477 or state level results based on the F.C.C. Local Competition Report or other relevant data.
- A change in the reported PVU factor by more than five percentage points from the preceding quarter.

(3) If after review of the data and information, the customer and the Company establishes revised PVU factors, the Company will begin using those revised PVU factors with the next bill period. (N)

Continued

ACCESS SERVICE

2. General Regulations (Cont'd) (N)

2.3 Obligations of the Customer (Cont'd)

2.3.11 Identification and Rating of VoIP-PSTN Traffic (Cont'd)

(D) PVU Factor Verification (Cont'd)

(4) If the dispute is unresolved, the Company may initiate an audit. The Company shall limit audits of the customer's PVU factor to no more than twice per year. The customer may request that the audit be conducted by an independent auditor. In such cases the associated auditing expenses will be paid by the customer.

- In the event that the customer fails to provide adequate records to enable the Company or an independent auditor to conduct an audit verifying the customer's PVU factors, the Company will bill the usage for all contested periods using the most recent undisputed PVU factors reported by the customer. These PVU factors will remain in effect until the audit can be completed.
- During the audit, the most recent undisputed PVU factors from the previous reporting period will be used by the Company.
- The Company will adjust the customer's PVU factors based on the results of the audit and implement the revised PVU in the next billing period or quarterly report date, whichever is first. The revised PVU factors will apply for the next two quarters before new factors can be submitted by the customer.
- If the audit supports the customer's PVU factors, the usage for the contested periods will be adjusted to reflect the customer's audited PVU factors. (N)

ACCESS SERVICE

2. General Regulations (Cont'd) (N)

2.4 Payment Arrangements and Credit Allowance (M)

2.4.1 Payment of Rates, Charges, and Deposits

(A) Deposits

The Company will require a deposit from all customers with a proven history of late payments to the Company and all customers who do not have established credit unless the customer is a successor of a company which has established credit and has no history of late payments to the Company. The deposit may be required prior to or after establishment of service. The total deposit may not exceed the estimated charges for service for a two month period. (M)

(M) Payment Arrangements and Credit Allowance 2.4 previously shown on Original Sheet Number 66.

(Continued) (N)

ACCESS SERVICE

2. General Regulations (Cont'd)

2.4 Payment Arrangements and Credit Allowance (Cont'd)

2.4.1 Payment of Rates, Charges, and Deposits (Cont'd)

(A) Deposits (Cont'd)

The fact that a deposit has been made does not relieve the customer from the responsibility of complying with the Company's regulations regarding prompt payment of bills. Annual interest at the rate described in the 2.4.1(B)(4) will be paid on all deposits held from the date the deposit is received up to and including the date the deposit is returned or credited to the customer's account. The deposit will be refunded after the customer has established a record of prompt payment for one year. When service is terminated, any deposit held will be credited on the final bill.

(B) Payment of Rates and Charges

The Company will bill all usage charges monthly in arrears. All non usage sensitive access services, including the Presubscription charge(s), will be billed monthly in advance. Nonrecurring charges will be billed in the month following the provision of service.

(1) The bill day for Presubscription Service will be the same day established for the provision of local service.

(Continued)

ACCESS SERVICE

2. General Regulations (Cont'd)

2.4 Payment Arrangements and Credit Allowance (Cont'd)

2.4.1 Payment of Rates, Charges, and Deposits (Cont'd)

(B) Payment of Rates and Charges (Cont'd)

(2) The bill day(s) for all access services other than Presubscription Service will be established by the Company for each customer account and shall appear on the carrier access bill. If the Company advises the customer in writing, an alternate billing schedule may be established on less than sixty (60) days notice or initiated by the Company more than twice in any consecutive 12-month period.

(3) Payment for service is due by the next bill day of the following month unless the due date falls on a Saturday, Sunday, or legal holiday (i.e., New Years, Independence Day, Labor Day, Thanksgiving, Christmas, Martin Luther King, Jr. Day, Memorial Day, and Presidents' Day are observed). If such payment date falls on a Sunday or on a Holiday, which is observed on a Monday, the payment date shall be the first non-Holiday day following such Sunday or Holiday. If such payment date falls on a Saturday or on a Holiday, which is observed on Tuesday, Wednesday, Thursday, or Friday, the payment date shall be the last non-Holiday day preceding such Saturday or Holiday.

(Continued)

ACCESS SERVICE

2. General Regulations (Cont'd)

2.4 Payment Arrangements and Credit Allowance (Cont'd)

2.4.1 Payment of Rates, Charges, and Deposits (Cont'd)

(B) Payment of Rates and Charges (Cont'd)

(4) If no payment is received by the payment date or if a payment or any portion of a payment is received by the Company after the payment date, or if a payment or any portion of a payment is received by the Company in funds which are not immediately available to the company, then a late payment penalty shall be due to the Company. The late payment penalty shall be the payment or the portion of the payment not received by the payment date times a late factor. The late payment factor of 0.000292 per day, compounded daily for the number of days from the payment date to and including the date that the customer actually makes the payment to the Company. This factor only applies for those Companies that filed the charge in Section 10 under the Miscellaneous Services. (C) (C)

(M) (M)

(M) 2.4.1(B)(5) now shown on Original Sheet Number 69.1.

(Continued)

ACCESS SERVICE

2. General Regulations (Cont'd) (N)

2.4 Payment Arrangements and Credit Allowance (Cont'd)

2.4.1 Payment of Rates, Charges, and Deposits (Cont'd)

(B) Payment of Rates and Charges (Cont'd) (N)

(5) In the event that a billing dispute concerning charges billed to the customer by the Company is resolved in favor of the Company, any disputed payments withheld pending settlement of the dispute shall be subject to the late payment penalty beginning ten (10) days after the payment date. If the dispute is resolved in favor of the customer, no late payment penalty will apply to the disputed amount. In this case, if full payment was made by the due date, the Company will refund the disputed amount in question plus interest. The penalty interest period shall begin ten (10) days following the due date or on the date the disputed amount was actually paid, whichever is later. Interest will be calculated as described in (4), above. (M) (M)

(M) 2.4.1(B)(5) previously shown on Original Sheet Number 69.

(Continued)

ACCESS SERVICE

2. General Regulations (Cont'd)

2.4 Payment Arrangements and Credit Allowance (Cont'd)

2.4.1 Payment of Rates, Charges, and Deposits (Cont'd)

(B) Payment of Rates and Charges (Cont'd)

(6) All actions by the Company or customer to recover its charges, or any part thereof, shall be initiated within two (2) years from the time the charges were incurred by the customer. For this purpose, an access bill of Company charges to the customer is sufficient action.

(7) When a payment for Access Service charges billed under this tariff is due to the Company from the customer as set forth in (3), preceding, on the same payment date that a Purchase of Accounts Receivable net purchase amount is due to the customer from the Company, the Company upon thirty one (31) days notice to the customer may net the payment for customer Access Service charges with the net purchase amount. The Company will pay the net amount to the customer on the payment date when such net amount is due to the customer or require the customer to pay to the Company the net amount when the net amount is due to the Company. If either party does not make the payment on the payment date, a late payment penalty as set forth in (4), preceding, applies.

(Continued)

ACCESS SERVICE

2. General Regulations (Cont'd)

2.4 Payment Arrangements and Credit Allowance (Cont'd)

2.4.1 Payment of Rates, Charges, and Deposits (Cont'd)

(B) Payment of Rates and Charges (Cont'd)

(8) For services provided on a monthly basis, the charge for the provision of a fractional months service will be determined by dividing the number of days that service was provided by thirty (30) and multiplying the result times the monthly rate. This calculation will be made subject to any minimum service periods required for specific services. The Company will, upon request and if available, furnish such detailed information as may reasonably be required for verification of any bill.

(9) When a rate as set forth in this tariff is shown to more than two decimal places, the charges will be determined using the rate shown. The resulting amount will then be rounded to the nearest penny (i.e., rounded to two decimal places).

2.4.2 Minimum Periods

Unless a minimum service period is described for a specific tariff item, the minimum period for which services are provided and for which rates and charges are applicable is one month.

When a service is discontinued prior to the expiration of the minimum period, the total charges at the rate level in effect at the time service is discontinued will apply for the remainder of the minimum period. The Company will estimate usage to the end of the minimum period based on historical data.

(Continued)

ACCESS SERVICE

2. General Regulations (Cont'd)

2.4 Payment Arrangements and Credit Allowance (Cont'd)

2.4.3 Credit Allowance for Service Interruptions

(A) General

A service is interrupted when it becomes unusable to the customer because of a failure of facilities used to furnish service under this tariff or in the event that the protective controls applied by the Company result in the complete loss of service by the customer. An interruption period starts when an inoperative service is reported to the Company and ends when the service is operative. An allowance for interruption will apply only when the interruption is not due to the negligence of the customer. The credit allowance for an interruption or for a series of interruptions shall not exceed the monthly rate for the service interrupted in any one monthly billing period.

(B) When a Credit Allowance Applies

In case of an interruption to any service, allowance for the period of interruption, if not due to the negligence of the customer, shall be as follows:

(1) For Switched Access Service, no credit shall be allowed for an interruption of less than 24 hours. The customer shall be credited for an interruption of 24 hours or more at the rate of 1/30 of the applicable monthly rates for each period of 24 hours or major fraction (12 hours and one minute) thereof that the interruption continues.

(Continued)

ACCESS SERVICE

2. General Regulations (Cont'd)

2.4 Payment Arrangements and Credit Allowance (Cont'd)

2.4.3 Credit Allowance for Service Interruptions (Cont'd)

(B) When a Credit Allowance Applies (Cont'd)

(2) For Special Access Services, no credit shall be allowed for an interruption of less than 30 minutes. The customer shall be credited for an interruption of 30 minutes or more at the rate of 1/1440 of the monthly charges for the facility or service for each period of 30 minutes or major fraction (16 minutes or more) thereof that the interruption continues.

(a) For two-point service, the monthly charge shall be the total of all the monthly rate element charges associated with the service (i.e., a channel termination per customer designated premises, channel mileage, and optional features and functions).

(b) If a portion of a service such as a portion of a multipoint special access facility can still be utilized during the service interruption, the credit allowance will only apply to the services which are inoperative (i.e., a channel termination per customer designated premises, channel mileage, and optional features and functions).

(Continued)

ACCESS SERVICE

2. General Regulations (Cont'd)

2.4 Payment Arrangements and Credit Allowance (Cont'd)

2.4.3 Credit Allowance for Service Interruptions (Cont'd)

(C) When a Credit Allowance Does Not Apply

No credit allowance will be made for:

(1) Interruptions caused by the negligence of the customer.

(2) Interruptions of a service due to the failure of equipment or systems provided by the customer or others.

(3) Interruptions of a service during any period in which the Company is not afforded access to the premises where the service is terminated.

(4) Interruptions of a service when the customer has released that service to the Company for maintenance purposes, to make rearrangements, or for the implementation of a change order during the time that was negotiated with the customer prior to the release of the service. Thereafter, a credit allowance as set forth in (B), preceding, applies.

(5) Periods when the customer elects not to release the service for testing and/or repair and continues to use it on an impaired basis.

(Continued)

ACCESS SERVICE

2. General Regulations (Cont'd)

2.4 Payment Arrangements and Credit Allowance (Cont'd)

2.4.4 Re-establishment of Service Following Fire, Flood, or Other Occurrence

(A) Nonrecurring Charges Do Not Apply

Charges do not apply for the re-establishment of service for the same customer following an interruption resulting from a fire, floor, or other occurrence attributed to an Act of God provided that:

(1) The service is of the same type as was provided prior to the interruption.

(2) The service is at the same location on the same premises.

(3) The re-establishment of service begins within sixty (60) days after Company service is available.

(B) Nonrecurring Charges Apply

Nonrecurring Charges apply for establishing service at a different location on the same premises or at a different premises pending re-establishment of service at the original location.

(Continued)

ACCESS SERVICE

2. General Regulations (Cont'd)

2.4 Payment Arrangements and Credit Allowance (Cont'd)

2.4.5 Access Service Provided by More Than One Telephone Company

When more than one company is involved in the provision of FGA, FGB, FGC, FGD, or Special Access services, the Companies involved will mutually agree upon one of the billing methods described in (A) or (B), following, to bill for the transport or mileage portion of the service. For FGB, FGC, FGD, and Special Access, the Company will select one of the options listed after agreeing to implement that method with the interconnecting companies.

The Company will notify the customer which of the billing methods will be used. The customer will place the order for service as set forth in 4.9. The Company receiving the order or copy of the order from the customer will be responsible for billing the customer according to one of the FCC approved methods. Additionally, the Company shall provide thirty (30) day advanced notification of any changes in the multiple carrier access billing arrangement.

(A) Single Bill/Multiple Tariff

Under this arrangement, the Company and the interconnecting carrier companies determine a billing entity (the Company, the interconnecting carrier, or a third party). The billing entity will prepare a single access bill with each Company's charges separately identified. The customer then pays the billing entity for the access charges and the billing entity then pays each Company involved in the provision of the service. This method would require that the billing entity maintain in its billing system the applicable tariff rates and charges for all Companies involved with the access service.

(Continued)

ACCESS SERVICE

2. General Regulations (Cont'd)

2.4 Payment Arrangements and Credit Allowance (Cont'd)

2.4.5 Access Service Provided by More Than One Telephone Company (Cont'd)

(B) Multiple Company/Multiple Tariff Billing

(1) Under the arrangement, each Company providing service will bill the customer according to its tariff. Additionally, these access bills must use the same access minutes of use and include cross references to the other Company's bills, and common circuit identification.

For Feature Group A, B, C, and D Switched Access service, the portion of the Local Transport provided by the Company is not distance sensitive. The Local Transport rate will apply to the total number of access minutes. The rate charged for the portion of Local Transport provided by a connecting exchange Telephone Company will be based on the connecting exchange Telephone Company's access tariff and may be distance sensitive.

(2) For Special Access, the portion of the Channel mileage provided by the Company is not distance sensitive. The Channel Mileage rate will apply to the total number of mileage sections. The rate charged for the portion of Channel Mileage provided by a connecting exchange Telephone Company will be based on the connecting exchange Telephone Company's access tariff and may be distance sensitive.

(Continued)

ACCESS SERVICE

2. General Regulations (Cont'd)

2.4 Payment Arrangements and Credit Allowance (Cont'd)

2.4.5 Access Service Provided by More Than One Telephone Company (Cont'd)

(B) Multiple Company/Multiple Tariff Billing (Cont'd)

(3) When three or more Telephone Companies are involved in providing an Access Service, the intermediate Telephone Company(s) will determine the appropriate charges as set forth in (2), preceding.

(C) Provisions of Service by Primary and Secondary Exchange Carriers

(1) The Secondary Exchange Carrier will bill the customer in the following situations:

(a) Where the customer utilizes Feature Group A Switched Access Service for calls between a Primary Exchange Carrier and a Secondary Exchange Carrier within the same Extended Area Service calling area, and/or

(b) Where the customer utilizes Feature Group B Switched Access Service for calls between a Primary Exchange Carrier's access tandem and a subtending Secondary Exchange Carrier following, where the Primary Exchange Carrier and the Secondary Exchange Carrier are not the same Company and do not have a revenue sharing arrangement where the Primary Exchange

(Continued)

ACCESS SERVICE

2. General Regulations (Cont'd)

2.4 Payment Arrangements and Credit Allowance (Cont'd)

2.4.5 Access Service Provided by More Than One Telephone Company (Cont'd)

(C) Provisions of Service by Primary and Secondary Exchange Carriers (Cont'd)

(1) (Cont'd)

(b) (Cont'd)

Carrier bills the total cost of access which includes the Secondary Exchange Carrier's cost of access.

The Secondary Exchange Carrier(s) will bill the customer Switched Access charges, Local Transport charges, and Carrier Common Line Charges as set forth in Section 10 for the Issuing Carrier, for all such access minutes. Such charges will be in addition to those charged by the Primary Exchange Carrier. The customer will place the order for these services as set forth in 4.9, following.

(2) Where the Primary Exchange Carrier and the Secondary Exchange Carrier do have a revenue sharing arrangement and the Primary Exchange Carrier bills the total cost of access which includes the Secondary Exchange Carrier's cost of access, the Secondary Exchange Carrier is precluded from billing the customer.

(Continued)

ACCESS SERVICE

2. General Regulations (Cont'd)

2.5 Connections

2.5.1 General

Customer Premise Equipment and Systems may be connected with Switched and Special Access Service furnished by the Company where such connection is made in accordance with the provisions specified in Technical Reference Publication AS No. 1 and in 2.1, preceding.

2.6 Definitions

Access Order

An order to provide the customer with Switched Access Service or Special Access Service or changes to existing services.

Access Minutes

The unit of usage of exchange facilities in intrastate for the purpose of calculating chargeable usage. On the originating end of an intrastate, usage is measured from the time the originating end user's call is delivered by the Company to and acknowledged as received by the customer's facilities connected with the originating exchange. On the terminating end of an intrastate call, usage is measured from the time the call is received by the end user in the terminating exchange. Timing of usage at both originating and terminating ends of an intrastate call shall terminate when the calling or called party disconnects, whichever event is recognized first in the originating and terminating end exchanges, as applicable.

(Continued)

ACCESS SERVICE

2. General Regulations (Cont'd)

2.6 Definitions (Cont'd)

Access Tandem

A Company switching system that provides a concentration and distribution function for originating or terminating traffic between end offices and a customer's premises.

Answer/Disconnect Supervision

The transmission of the switch trunk equipment supervisory signal (off-hook or on-hook) to the customer's point of termination as an indication that the called party has answered or disconnected.

Balance (100 Type) Test Line

An arrangement in an end office which provides for balance and noise testing.

Business Day

The times of day that a company is open for business. Business Day hours for the Company may be determined by contacting the business office.

Busy Hour Minutes of Capacity (BHMC)

The customer specified maximum amount of Switched Access Service access minutes the customer expects to be handled in an end office switch during any hour in an 8:00 A.M. to 11:00 P.M. period for the Switched Access Service ordered. This customer furnished BHMC quantity is the input data the Company uses to determine the number of transmission paths for the Switched Access Service ordered.

(Continued)

ACCESS SERVICE

2. General Regulations (Cont'd)

2.6 Definitions (Cont'd)

Call

A customer attempt for which the complete address code (e.g., 0-, 911, or 10 digits) is provided to the serving dial tone office.

Carrier or Common Carrier

See Interexchange Carrier.

CCS

A standard unit of traffic load that is equal to 100 seconds of usage or capacity of a group of servers (e.g., trunks). Also known as "100 call seconds".

Central Office

A local Company switching system where Telephone Exchange Service customer station loops are terminated for purposes of interconnection to each other and to trunks.

Centrex CO Service

A service that (1) uses a portion of a Company switch located at the Company central office to meet the customer's internal needs and serves as the customer's interface with the local and interexchange networks and (2) links the customer's main stations to the Company switch with subscriber loops.

(Continued)

ACCESS SERVICE

2. General Regulations (Cont'd)

2.6 Definitions (Cont'd)

Channels

A communications path between two or more points of termination.

Coin Station

A location where equipment is provided where customers can originate telephonic communications and pay the applicable charges by inserting coins into the equipment.

Commission

Idaho Public Utilities Commission (I.P.U.C.).

Common Channel Signaling (CCS)

The term "Common Channel Signaling" (CCS) denotes a high speed packet switched communications network which is separate (out of band) from the public packet switched and message networks. Its purpose is to carry addressed signaling messages for individual trunk circuits and/or database related services between Signaling Points in the CCS network.

Common Channel Signaling Access Capability (CCSAC)

The term "Common Channel Signaling Access Capability" denotes the connection between the customer's point of presence and the Signal Transfer Point (STP) designated by the Company for the transport of signaling information.

(Continued)

ACCESS SERVICE

2. General Regulations (Cont'd)

2.6 Definitions (Cont'd)

Common Line

A line, trunk, pay telephone line, or other facility provided under the general and/or Local Exchange Service Tariff of the Company, terminated on a central office switch. A common line-residence is a line or trunk provided under the residence regulations of the Local Exchange Service Tariff. A common line-business is a line provided under the business regulations of the general and/or Local Exchange Service Tariff.

Communications Systems

Channels and other facilities which are capable of communications between terminal equipment provided by other than the Company.

Conventional Signaling

The inter-machine signaling system which has been traditionally used in North America for the purpose of transmitting the called number's address digits from the originating end office to the switching machine that will terminate the call. In this system, all of the dialed digits are received by the originating switching machine, a path is selected, and the sequence of supervisory signals and outpulsed digits is initiated. No overlap outpulsing, ten-digit ANI, ANI information digits, or acknowledgement wink are included in this signaling sequence.

(Continued)

ACCESS SERVICE

2. General Regulations (Cont'd)

2.6 Definitions (Cont'd)

Customer Message

A completed intrastate call originated by an end user. A customer message begins when answer supervision from the premises of the ordering customer is received by Company recording equipment indicating that the called party has answered. A message ends when disconnect supervision is received by Company recording equipment from either the premises of the ordering customer or the customer's end user premises from which the call originated.

Customer Designated Premises

The premises specified by the customer for the provision of Access Service.

Customers

Any individual, partnership, association, joint-stock company, trust, corporation, or governmental entity or other entity which subscribes to the services offered under this tariff, including both Interexchange Carriers and end users.

Data Transmission (107 Type) Test Line

An arrangement which provides for a connection to a signal source which provides test signals for one-way testing of data and voice transmission parameters.

Detail Billing

The listing of each message and/or rate element for which charges to a customer are due on a bill prepared by the Company.

(Continued)

ACCESS SERVICE

2. General Regulations (Cont'd)

2.6 Definitions (Cont'd)

Effective 2-Wire

A condition which permits the simultaneous transmission in both directions over a channel, which does not insure independent information transmission in both directions. Effective 2-wire channels may be terminated with 2-wire or 4-wire interfaces.

Effective 4-Wire

A condition which permits the simultaneous independent transmission of information in both directions over a channel. The method of implementing effective 4-wire transmission is at the discretion of the Company (physical, time domain, frequency-domain separation, or echo cancellation techniques).

End Office Switch

A local Company switching system where Telephone Exchange Service customer common lines are terminated for purposes of interconnection to trunks. Included are Remote Switching Modules and Remote Switching Systems served by a host office in a different wire center.

End User

Any customer of an intrastate telecommunications service that is not a carrier, except that a carrier shall be deemed to be an "end user" to the extent that such carrier uses a telecommunications service for administrative purposes, without making such service available to others, directly or indirectly.

(Continued)

ACCESS SERVICE

2. General Regulations (Cont'd)

2.6 Definitions (Cont'd)

Entry Switch

See First Point of Switching.

Exchange

A unit generally smaller than a local access and transport area, established by the Company for the administration of communications service in a specified area which usually embraces a city, town, or village and its environs. It consists of one or more central offices together with the associated facilities used in furnishing communications service within that area. The exchange includes any Extended Area Service Area that is an enlargement of a Company's exchange area to include nearby exchanges.

Exit Message

The term "Exist Message" denotes an SS7 message sent to an end office by the Company's tandem switch to mark the Carrier Connect Time when the Company's tandem switch sends an Initial Address Message to an interexchange customer.

First Point of Switching

The first Company location at which switching occurs on the terminating path of a call proceeding from the customer premises to the terminating end office and, at the same time, the last Company location at which switching occurs on the originating path of a call proceeding from the originating end office to the IC or customer premises.

(Continued)

ACCESS SERVICE

2. General Regulations (Cont'd)

2.6 Definitions (Cont'd)

Gain Conditioning

The increase in signal power resulting from amplification. Gain is characterized as the ratio of output to input power, voltage or current, expressed in decibels (dBs). The ratio of the output power of a device or circuit to the input power, expressed in decibels.

Henry

The inductance in a circuit in which the electromotive force induced is one volt when the inducing current varies at the rate of one ampere per second. It is 1,000,000,000 electromagnetic units, and is the unit of inductance.

Host Office

An electronic switching system which provides call processing capabilities for one or more Remote Switching Modules or Remote Switching Systems.

Immediately Available Funds

A corporate or personal check drawn on a bank account for which funds are available for use by the receiving party on the same day on which they are received and include U.S. Federal Reserve bank wire transfers, U.S. Federal Reserve notes (paper cash), U.S. coins, U.S. Postal Money Orders, and New York Certificates of Deposit.

(Continued)

ACCESS SERVICE

2. General Regulations (Cont'd)

2.6 Definitions (Cont'd)

Individual Case Basis

A condition in which the regulations, if applicable, rates and charges for an offering under the provisions of this tariff are developed based on the circumstances in each case.

Initial Address Message

The term "Initial Address Message" denotes an SS7 message sent in the forward direction to initiate trunk set up, reserve an outgoing trunk and process the information about that trunk along with other data relating to the routing and handling of the call to the next switch.

Interconnection Point

A point where facilities of the Company meets facilities of a connecting exchange telephone company.

Interexchange Carrier (IC) or Interexchange Common Carrier

Any individual, partnership, association, joint-stock company, trust, governmental entity, or corporation engaged for hire in intrastate by wire or radio, between two or more exchanges.

Interstate Call

A term which denotes both interstate and foreign communications.

(Continued)

ACCESS SERVICE

2. General Regulations (Cont'd)

2.6 Definitions (Cont'd)

Intrastate Call

Every call that is originated by a calling party in Idaho and terminated to a called party in Idaho is an intrastate communication.

Line Side Connection

A connection of a transmission path to the line side of a local exchange switching system.

Local Access and Transport Area

A geographic area established for the provision and administration of communications service. It encompasses one or more designated exchanges, which are grouped to serve common social, economic, and other purposes.

Loop Around Test Line

An arrangement utilizing a Company central office to provide a means to make certain two-way transmission tests on a manual basis. This arrangement has two central office terminations, each reached by means of separate telephone numbers and does not require any specific customer premises equipment. Equipment subject to this test arrangement is at the discretion of the customer.

Message

See "Call".

(Continued)

ACCESS SERVICE

2. General Regulations (Cont'd)

2.6 Definitions (Cont'd)

Milliwatt (102 Type) Test Line

An arrangement in an end office which provides a 1004 Hz tone at 0 dBm0 for one-way transmission measurements towards the customer's premises from the Company end office.

Net Salvage

The estimated scrap, sale, or trade-in value, less the estimated cost of removal. Cost of removal includes the costs of demolishing, or otherwise disposing of the material and any other applicable costs. Since the cost of removal may exceed salvage value, net salvage may be negative.

Network Control Signaling

The transmission of signals used in the telecommunications system which perform functions such as supervision (control, status, and charge signals), address signaling (e.g., dialing), calling and called number identifications, rate of flow, service selection error control, and audible tone signals (call progress signals indicating reorder or busy conditions, alerting, coin denomination, coin collect, and coin return tones) to control the operation of the telecommunications system.

Nonsynchronous Test Line

An arrangement in step-by-step end offices which provides operational tests which are not as complete as those provided by the synchronous test lines, but can be made more rapidly.

(Continued)

ACCESS SERVICE

2. General Regulations (Cont'd)

2.6 Definitions (Cont'd)

North American Numbering Plan

A three-digit area (Numbering Plan Area) code and a seven-digit telephone number made up of a three-digit Central Office code plus a four-digit station number.

Off-Hook

The active condition of Switched Access or a Telephone Exchange Service line.

On-Hook

The idle condition of Switched Access or a Telephone Exchange Service line.

Open Circuit Test Line

An arrangement in an end office which provides an ac open circuit termination of a trunk or line by means of an inductor of several Henries. (See the definition Henry).

Originating Direction

The use of access service for the origination of calls from an end user Premises to an IC Premises.

(Continued)

ACCESS SERVICE

2. General Regulations (Cont'd)

2.6 Definitions (Cont'd)

Overlap Outpulsing

The feature of the exchange access signaling system which permits initiation of pulsing to the customer's premises before the calling subscriber has completed dialing an originating call.

Pay Telephone

Instruments that are available to the general public for public convenience and necessity.

Point of Termination

The point of demarcation within a customer-designated premises at which the Company's responsibility for the provision of Access Service ends.

Premises

A building or buildings on continuous property (except Railroad Right-of-Way, etc.) not separated by a public highway.

Primary Exchange Carrier

Denotes the Local Exchange Telephone Company in whose exchange a customer's first point of switching (i.e., dial tone office for FGA, access tandem for FGB) is located.

(Continued)

ACCESS SERVICE

2. General Regulations (Cont'd)

2.6 Definitions (Cont'd)

Release Message

The term "Release Message" denotes an SS7 Message sent in either direction to indicate that a specific circuit is being released.

Remote Switching Modules and/or Remote Switching Systems

Small, remotely controlled electronic end office switches which obtain their call processing capability from an ESS-type Host Office. The Remote Switching Modules and/or Remote Switching Systems cannot accommodate direct trunks to an IC.

Secondary Exchange Carrier

Denotes the Local Exchange Telephone Company in whose exchange a customer's end users end office is located and where the customer's first point of switching is provided by a Primary Exchange Carrier who is not the same Exchange Carrier as the Secondary Exchange Carrier.

Serving Wire Center

The wire center from which the customer designated premises would normally obtain dial tone from the Company.

Signaling Point (SP)

The term "Signaling Point" (SP) denotes an SS7 network interface element capable of originating and terminating SS7 trunk signaling messages.

(Continued)

ACCESS SERVICE

2. General Regulations (Cont'd)

2.6 Definitions (Cont'd)

Signaling Point of Interface (SPOI)

The term "Signaling Point of Interface" (SPOI) denotes the interface point between the Company and its Access Service customers for purposes of exchanging SS7 signaling messages for CCS services.

Signaling System Seven (SS7)

The term "Signaling System Seven" (SS7) denotes the layered protocol used for standardized Common Channel Signaling in the United States.

Signaling Transfer Point (STP)

The term "Signaling Transfer Point" (STP) denotes a packet switch providing CCS Network Access that performs CCS message routing and screening.

Shortage of Facilities or Equipment

A condition which occurs when the Company does not have appropriate cable, switching capacity, bridging, or multiplexing equipment, etc., necessary to provide the Access Service requested by the customer.

Short Circuit Test Line

An arrangement in an end office which provides for an ac short circuit termination of a trunk or line by means of a capacitor of at least four Micro Farads.

(Continued)

ACCESS SERVICE

2. General Regulations (Cont'd)

2.6 Definitions (Cont'd)

Subtending End Office of an Access Tandem

An end office that has final trunk group routing through that tandem.

Synchronous Test Line

An arrangement in an end office which performs marginal operational tests of supervisory and ring-tripping functions.

Terminating Direction

The use of Access Service for the completion of calls from an IC premises to an end user premises.

Termination Liability

The amount which will be billed if services using specially constructed facilities are terminated prior to the expiration of the Termination Liability Period.

Traffic Service Position System

Permits operator positions serving public phones to be located remotely from the central office which services the pay phone.

Transmission Measuring (105 Type) Test Line

An arrangement in an end office which provides far-end access to a recorder and permits two-way loss and noise measurements to be made on trunks from a near end office.

(Continued)

ACCESS SERVICE

2. General Regulations (Cont'd)

2.6 Definitions (Cont'd)

Transmission Path

An electrical path capable of transmitting signals within the range of the service offering, e.g., a voice grade transmission path is capable of transmitting voice frequencies within the approximate range of 300 to 3000 Hz. A transmission path is comprised of physical or derived facilities consisting of any form or configuration of plant typically used in the telecommunications industry.

Trunk

A communications path connecting two switching systems in a network, used in the establishment of an end-to-end connection.

Trunk Group

A set of trunks which are traffic engineered as a unit for the establishment of connections between switching systems in which all of the communications paths are interchangeable.

Trunk Side Connection

The connection of a transmission path to the trunk side of a local exchange switching system. This type of connection is used when providing FGB, FGC, and FGD Switched Access Service.

Two-Wire to Four-Wire Conversion

An arrangement which converts a four-wire transmission path to a two-wire transmission path to allow a four-wire facility to terminate in a two-wire entity (e.g., a central office switch).

(Continued)

ACCESS SERVICE

2. General Regulations (Cont'd)

2.6 Definitions (Cont'd)

Uniform Service Order Code

A three or five character alphabetic, numeric, or an alphanumeric code that identifies a specific item of service or equipment. Uniform Service Order Codes are used in the Company billing system to generate recurring rates and nonrecurring charges.

VoIP-PSTN Traffic (N)

The term VoIP-PSTN Traffic shall have the meaning denoted in the Federal Communications Commission Report and Order in WC Docket Nos. 10-90, etc., F.C.C. Release No. 11-161 (November 18, 2011). It is traffic exchanged over PSTN (Public Switched Telephone Network) facilities that originates and/or terminates in IP (Internet Protocol) format. (N)

V and H Coordinates Method

A method of computing airline miles between two points by utilizing an established formula which id based on the vertical and horizontal coordinates of the two points.

WATS Serving Office

The term "WATS Serving Office" denotes a Company designated serving wire center where switching, screening, and/or recording functions are performed in connection with the closed-end of WATS or WATS-type services.

Wire Center

A building in which one or more central offices, used for the provision of Telephone Exchange Services, are located.

(Continued)

ACCESS SERVICE

3. Carrier Common Line Access Service

Effective July 1, 2012, the Carrier Common Line Access Service Rates and Conditions will no longer apply for several companies that converted to the interstate rates and rate structure, but for other companies it will still be effective until further notice. This change is addressed in Case. No. GNR-T-12-04, Order 32534. (C)

3.1 General Description

Carrier Common Line Access provides for the customer's use of the Company common lines for access to end users to furnish Intrastate Communications.

Carrier Common Line Access is provided when the customer obtains the Company Switched Access Service under this tariff.

3.2 Limitations

3.2.1 Exclusions

Neither a telephone number nor detail billing are provided with Carrier Common Line Access. Additionally, directory listings and intercept arrangements are not included in the rates for Carrier Common Line Access.

3.2.2 Access Groups

All line side connections provided in the same access group will be limited to the same features and operating characteristics.

All trunk side connections provided in the same access group will be limited to the same features and operating characteristics.

(Continued)

ACCESS SERVICE

3. Carrier Common Line Access Service (Cont'd)

3.2 Limitations (Cont'd)

3.2.3 WATS Access Lines

Where Switched Access Services are connected with WATS Access Lines at Company Designated WATS Serving Offices for the provision of WATS and/or WATS-type services, Switched Access Service minutes which are carried on that end of the service (i.e., originating minutes for outward WATS and/or WATS-type services and terminating minutes for inward WATS and/or WATS-type services) shall not be assessed Carrier Common Line Access per minute rates. WATS calls are calls that are transported, in part, over dedicated WATS Access Service lines that transport Originating WATS and Terminating 800 services between the Company's switching offices and the customers' originating/terminating points. The originating end of an outgoing WATS line and the terminating end of a dedicated terminating 800 line are considered a closed ends and are billed dedicated special access rates. The carrier common line rates do not apply to calls processed over these facilities.

3.3 Undertaking of the Telephone Company

3.3.1 See General Regulations, Section 2.1.

3.4 Obligations of the Customer

3.4.1 See General Regulations, Section 2.3

(Continued)

ACCESS SERVICE

3. Carrier Common Line Access Service (Cont'd)

3.4 Obligations of the Customer (Cont'd)

3.4.2 Where Feature Group C or D end office switching is provided without the Company recording and the IC records minutes of use which will be used to determine Carrier Common Line Access charges (i.e., Feature Group C or D operator and Traffic Service Position System (TSPS) calls such as pay telephone sent-paid, operator-DDD, operator-person, collect, credit-card, third number, and/or other like calls), the IC shall furnish such minutes of use detail to the Company's billing entity in a timely manner. If the IC does not furnish the data to the billing entity, the IC shall identify all Switched Access Service which could carry such calls in order for the billing entity to accumulate the minutes of use through the use of the Company measuring and recording equipment.

3.5 Rate Regulations

3.5.1 The Carrier Common Line Access rates will be billed to each Switched Access Service provided under this tariff at the rates set forth in Section 10, under Switched Access Service for the Issuing Carriers.

3.5.2 When access minutes are used to determine the Carrier Common Line Access charges, they will be accumulated using call detail recorded by the Company equipment except as set forth in 3.5.4, following, and Feature Group C operator and TSPS call detail such as pay telephone sent-paid, operator-DDD, operator-person, collect, credit-card, third number, and/or other like calls recorded by the customer. The Company measuring and recording equipment except as set forth in 3.5.4, following, will be associated with end office or local tandem switching equipment and will record each originating and terminating access minute where answer supervision is received. The accumulated access minutes will be summed on a line by line basis, by line group, or by end office, whichever type of account is used by the Company, for each customer and then rounded to the nearest minute.

(Continued)

ACCESS SERVICE

3. Carrier Common Line Access Service (Cont'd)

3.5 Rate Regulations (Cont'd)

3.5.3 When the customer reports interstate and intrastate use of in-service Switched Access Service, the Carrier Common Line Access charges will be billed only to intrastate Switched Access Service access minutes based on the data reported by the customer. The intrastate Switched Access Service access minutes will be used to determine the Carrier Common Line Charges as set forth in 3.5.5, following.

3.5.4 The charges will be determined as follows:

(A) The access minutes for Feature Groups A, B, C, or D Switched Access will be multiplied by the per-minute rates as set forth in Section 10 for the Issuing Carrier to determine the charges.

(B) Carrier Common Line charges shall not be reduced unless Switched Access Charges are applied to the customer's Switched Access Services.

(C) The terminating per minute charge(s) apply to all terminating access minutes of use, plus all originating access minutes of use associated with calls placed to 800 numbers, plus all originating access minutes of use associated with Line Side Access Services where the off-hook supervisory signaling is forwarded by the customer's equipment when the called party answers.

(D) The originating per minute charge(s) apply to all originating access minutes of use, less those originating access minutes of use associated with calls placed to 800 numbers and less those originating access minutes of use associated with Line Side Access Services where the off-hook supervisory signaling is forwarded by the customer's equipment when the called party answers.

(Continued)

ACCESS SERVICE

4. Ordering Options for Switched and Special Access Service

4.1 General

This section sets forth the regulations and order related charges for Access Orders for Switched and Special Access Services. These charges are in addition to other applicable charges as set forth in other sections of this tariff. All the charges mentioned in Section 4 are found by Issuing Carrier in Section 10 under Miscellaneous Services.

An Access Order is an order to provide the customer with Switched Access Service or Special Access Service or to provide changes to existing services.

4.1.1 Ordering Conditions

(A) A customer may order any number of services of the same type and between the same premises on a single Access Order. All details for services for a particular order must be identical except for those for multi-point service.

(B) The customer shall provide all information necessary for the Company to provide and bill for the requested service. In addition to the order information required in 4.2, following, the customer must also provide:

(1) Customer name and premises address(es).

(2) Billing name and address (when different from customer name and address).

(3) Customer contact name(s) and telephone number(s) for the following provisioning activities: order negotiation, order confirmation, interactive design, installation, and billing.

(Continued)

ACCESS SERVICE

4. Ordering Options for Switched and Special Access Service (Cont'd)

4.1 General (Cont'd)

4.1.1 Ordering Conditions (Cont'd)

(C) The Company will establish a service date when the customer has placed an order for service with all the appropriate information to allow for the processing of the Access Order. The date on which the service date is established is considered to be the Application Date (Order Date). The Company will provide a firm order confirmation to the customer and will advice the customer of the Application Date and the associated critical dates.

(D) The time required to provision the service (i.e., the interval between the Application Date and the Service Date) is known as the service interval, and where possible, will reflect the customer's requested service date.

4.1.2 Provision of Other Services

(A) Other services shall be ordered with an Access Order or as set forth in (B), following.

(B) With the agreement of the Company, the items listed in (A), preceeding, may subsequently be added to the order at any time, up to and including the service date for the Access Service.

(Continued)

ACCESS SERVICE

4. Ordering Options for Switched and Special Access Service (Cont'd)

4.1 General (Cont'd)

4.1.2 Provision of Other Services (Cont'd)

(C) When the Company determines that Additional Engineering is necessary to accommodate a customer request, the customer will be so notified and will be furnished with a written statement setting forth the justification for the Additional Engineering as well as an estimate of the charges. If the customer agrees to the Additional Engineering, a firm order will be established. If the customer does not want the service or facilities after being notified that Additional Engineering of the Company facilities is required, the order will be withdrawn and no charges will apply.

4.2 Access Order

4.2.1 When placing an order for Access Service, customers must complete a Company standard access order. All customers shall provide, at a minimum, the following information:

(A) For Feature Group A Switched Access Service, the customer shall specify the number of lines and the first point of switching (i.e., dial tone office), the Local Transport options and Local Switching options desired. In addition, the customer shall specify which lines are to be arranged in multi-line hunt group arrangements and which lines are to be provided as single lines.

(Continued)

ACCESS SERVICE

4. Ordering Options for Switched and Special Access Service (Cont'd)

4.2 Access Order (Cont'd)

4.2.1 (Cont'd)

(B) When Feature Group A is ordered, the customer shall specify whether or not the terminating traffic is to be restricted to the local exchange calling area or extended beyond the local exchange calling area but within the LATA. When Feature Group A traffic is terminated beyond the local exchange calling area, but remains within the LATA, all rates for Switched Access, as set forth in Section 10, will apply.

(C) For Feature Group B Switched Access Service, the customer shall specify the number of trunks and the end office when direct routing to the end office is desired. In addition, the customer shall also specify for terminating only access minutes, whether the trunks are to be arranged in trunk group arrangements or provided as single trunks.

(D) For Feature Group C and D Switched Access Service, the customer shall specify the number of busy hour minutes of capacity (BHMC) from the customer's premises to the end office by Feature Group and by type of BHMC. This information is used to determine the number of transmission paths. The customer then specifies the Local Transport and Local Switching options.

(Continued)

ACCESS SERVICE

4. Ordering Options for Switched and Special Access Service (Cont'd)

4.2 Access Order (Cont'd)

4.2.1 (Cont'd)

(E) For Special Access Services, the customer must specify the customer designated premises or Hubs involved, the type of service (e.g., Voice Grade, High Capacity, etc.) the channel interface, technical specification package, and options desired. For multi-point services, the channel interface at each premises may, at the request of the customer, be different but all such interfaces shall be compatible. Where the Special Access Service is exempt from the Special Access Surcharge, the customer shall furnish with the order the certification.

4.3 Calculation of Busy Hour Minutes of Capacity (BHMC)

4.3.1 The BHMC may be determined by the customer in the following manner: For each day (8 a.m. to 11 p.m., Monday through Friday, excluding national holidays), the customer shall determine the highest number of minutes of use for a single hour (i.e., 55 minutes in the 10-11 a.m. hour). The customer shall, for the same hour period (i.e., busy hour) for each of twenty (20) consecutive business days, pick the twenty (20) consecutive business days in a calendar year which add up to the largest number of minutes of use. Both originating and terminating minutes shall be included. The customer shall then determine the average busy hour minutes of capacity (i.e., BHMC) by dividing the largest number of minutes of use figure for the same hour period for the consecutive twenty (20) business day period by 20. This computation shall be performed for each end office the customer wishes to serve. These determinations thus establish the forecasted BHMC for each end office.

(Continued)

ACCESS SERVICE

4. Ordering Options for Switched and Special Access Service (Cont'd)

4.3 Calculation of Busy Hour Minutes of Capacity (BHMC) (Cont'd)

4.3.2 BHMCs are differentiated by type and directionality of traffic carried over a Switched Access Service arrangement. Differentiation of traffic among BHMC types is necessary for the Company to properly design Switched Access Service to meet the traffic carrying capacity requirement of the customer.

4.3.3 There are two major BHMC categories identified as Originating and Terminating. Originating BHMCs represent access capacity within a LATA for carrying traffic from the end user to the customer; Terminating BHMCs represent access capacity within a LATA for carrying traffic from the customer to the end user. When ordering capacity for FGC Access or FGD Access, the customer must, at a minimum, specify such access capacity in terms of Originating BHMCs and/or Terminating BHMCs.

4.3.4 Because some customers will wish to further segregate their originating traffic into separate trunk groups, Originating BHMCs are further categorized into Domestic, 800, 900, Operator, and IDDD. Domestic BHMCs represent access capacity or carrying only domestic traffic other than 800, 900, and Operator traffic; IDDD BHMCs represent access capacity for carrying only international traffic; and, 800, 900, and Operator BHMCs represent access capacity for carrying, respectively, only 800, 900, or Operator traffic. When ordering such types of access capacity, the customer must specify Domestic, 800, 900, Operator, or IDDD BHMCs.

(Continued)

ACCESS SERVICE

4. Ordering Options for Switched and Special Access Service (Cont'd)

4.3 Calculation of Busy Hour Minutes of Capacity (BHMC) (Cont'd)

4.4 Access Order Service Date Intervals

Access Service is provided with Service Date Intervals. The Company shall make available to all customers a schedule of Service Date Intervals applicable for Switched and Special Access Services. The schedule shall specify the services and the quantities of services that can be provided in the Service Date Intervals. Service Date Interval schedules are provided during regular business days at the Company offices at which the customer places an order for Access Service.

Access Services provided in a Service Date Interval will be installed during the Company business days. If a customer requests that installation be done outside of scheduled work hours, and the Company agrees to this request, the customer will be subject to applicable Additional Labor Charges as set forth in Section 10.

4.5 Access Order Modifications

The customer may request a modification of its Access Order prior to the service date. The Company will make every effort to accommodate a requested modification when it is able to do so with the normal work force assigned to complete such an order within normal business hours. If the modification cannot be made with the normal work force during normal business hours, the Company will notify the customer. If the customer still desires the Access Order modification, the Company will schedule a new service date. Additional Labor Charges as set forth in Section 10 will apply.

(Continued)

ACCESS SERVICE

4. Ordering Options for Switched and Special Access Service (Cont'd)

4.5 Access Order Modifications (Cont'd)

Any increase in the number of Special Access Service circuits or Switched Access Service lines, trunks, or busy hour minutes of capacity will be treated as a new Access Order (for the increased amount only).

If order modifications are necessary to satisfy the transmission performance for a Special Access Service ordered by a customer, these changes will be made without order modification charges being incurred by the customer.

4.5.1 Service Date Change

Access Order service dates may be changed, but the new service date may not exceed the original service date by more than thirty (30) calendar days. If the customer requested service date is more than thirty (30) calendar days after the original service date, the order will be cancelled by the Company and reissued with the appropriate cancellation charges applied. If the Company determines it can accommodate the customer's request without delaying service dates for orders of other customers, a new service date may be established that is prior to the original standard or negotiated interval service date.

If the service date is changed to an earlier date, and the Company determines additional labor or extraordinary costs are necessary to meet the earlier service date requested by the customer, the customer will be notified by the Company that Additional Labor Charges as described in Section 7 apply.

(Continued)

ACCESS SERVICE

4. Ordering Options for Switched and Special Access Service (Cont'd)

4.5 Access Order Modifications (Cont'd)

4.5.2 Partial Cancellation

Any decrease in the number of ordered Special Access Service circuits or Switched Access Service lines, trunks, or busy hour minutes of capacity will be treated as a partial cancellation and the charges as set forth in 4.6.2 will apply.

4.6 Cancellation of an Access Order

4.6.1 A customer may cancel an Access Order on any date after receipt of the order by the Company and prior to the installation of service. The cancellation date is the date the Company receives written or verbal notice from the customer that the order is to be cancelled. The verbal notice must be followed by written confirmation within ten (10) days. If a customer or a customer's end user is unable to accept Access Service within thirty (30) calendar days after the original service date, the customer has the choice of the following options:

- The Access Order shall be cancelled and charges set forth in 4.6.2, following, will apply, or

- Billing for the service will commence.

In such instances, the cancellation date or the billing date, depending on which option is selected by the customer, shall be the 31st day beyond the original service date of the Access Order.

(Continued)

ACCESS SERVICE

4. Ordering Options for Switched and Special Access Service (Cont'd)

4.6 Cancellation of an Access Order (Cont'd)

4.6.2 When a customer cancels an Access Order and the Company incurs any costs associated with the processing of the Access Order or installation prior to the cancellation date, cancellation charges will apply.

(A) Installation and Order costs of Switched or Special Access Service facilities are considered to have started when the Company incurs any cost in connection therewith or in preparation thereof which would not otherwise have been incurred.

(B) Where installation of access facilities and/or order processing has been started prior to the cancellation, the charges specified in (1) or (2), following, whichever is lower, shall apply.

(1) A charge equal to the costs incurred in such installation, less estimated net salvage, determined as detailed in (C), following, and/or a charge equal to the costs incurred in such order processing.

(2) The charge for the minimum period of Switched or Special Access Service ordered by the customer.

(C) Charges applicable as specified in (B)(1), preceding, include the non-recoverable cost of equipment and material ordered, provided or used, plus the non-recoverable cost of installation and removal including the costs of engineering, labor, supervision, transportation, rights-of-way, and other associated costs.

(Continued)

ACCESS SERVICE

4. Ordering Options for Switched and Special Access Service (Cont'd)

4.6 Cancellation of an Access Order (Cont'd)

4.6.3 When a customer cancels an order for the discontinuance of service, no charges apply for the cancellation.

4.6.4 If the company misses a service date by more than thirty (30) days due to circumstance over which it has direct control (excluding, i.e., Acts of God, governmental requirements, work stoppages, and civil commotions), the customer may cancel the Access Order without incurring cancellation charges.

4.7 Selection of Facilities for Access Orders

4.7.1 When there are analog or digital high capacity facilities to a Hub on order or in service for the customer's use, the customer may request a specific channel or transmission path be used to provide the Switched or Special Access service requested in an Access Order. The Company will make a reasonable effort to accommodate the customer's request.

4.7.2 For all other Access Orders, the option to request a specific transmission path or channel is not provided.

4.8 Minimum Period Charge

When Access Service is disconnected prior to the expiration of the minimum period, charges are applicable for the balance of the minimum period. A disconnect constitutes facilities being returned to available inventory.

(Continued)

ACCESS SERVICE

4. Ordering Options for Switched and Special Access Service (Cont'd)

4.8 Minimum Period Charge (Cont'd)

The Minimum Period Charge for monthly billed services will be determined as follows:

4.8.1 For Special Access Service, the charge for a month or fraction thereof is the applicable monthly rates for the service as set forth in Section 10.

4.9 Access Orders for Services Provided by More than One Telephone Company

The Company will provide Access Services under this tariff where more than one Company is involved in the provision of Access Service as set forth in 4.9.1, following. The ordering procedure for this service is dependent upon the billing arrangement to be used by the companies involved in providing the Access Service. The Company will notify the customer which of the ordering procedures will apply.

4.9.1 When a customer orders an Access Service that is provided by more than one Telephone Company, the following will apply:

(A) For FGC and D Switched Access Services, Feature Group A and B Switched Access Services ordered to an equal access end office and Special Access Services, the customer will place the order with each Telephone Company that provides the service.

(1) Each Telephone Company will provide the appropriate access service elements within its operating territory to a physical point of interconnection with the other involved Telephone Company(ies). They physical point of interconnection is the location where one Telephone Company's facilities connect with another Telephone Company's facilities.

(Continued)

ACCESS SERVICE

4. Ordering Options for Switched and Special Access Service (Cont'd)

4.9 Access Orders for Services Provided by More than One Telephone Company (Cont'd)

4.9.1 (Cont'd)

(A) (Cont'd)

(2) Each Telephone Company that receives an order will bill the customer for the appropriate access service elements provided by each respective Telephone Company.

5. Switched Access Service

5.1 General

Switched Access Service, which is available to customers for their use in furnishing their services to end users, provides a two-point electrical communications path between a customer's premises and an end user's premises. It provides for the use of common terminating, switching, and trunking facilities, and common subscriber plant of the Company. Switched Access Service provides for the ability to originate calls from an end user's premises to a customer's premises, and to terminate calls from a customer's premises to an end user's premises.

(Continued)

ACCESS SERVICE

5. Switched Access Service (Cont'd)

5.2 Rate Categories

5.2.1 There are four rate categories which apply to Switched Access Service:

- Local Transport.
- End Office (Local Switching).
- Carrier Common Line as described in Section 3.
- 800 Data Base Access Service.

5.2.2 Description of the Rate Categories

(A) Local Transport

The Local Transport provides the transmission facilities between the customer's premises and the end office switches where the customer's traffic is switched to originate or terminate the customer's communications.

Local Transport is a two-way voice frequency transmission path. The two-way voice frequency transmission permits the transport of calls in the originating direction (from the end user end office switch to the customer's premises) and in the terminating direction (from the customer's premises to the end office switch), but not simultaneously. The voice frequency transmission path may be comprised of any form or configuration of plant capable of and typically used in the telecommunications industry for the transmission of voice and associated telephone signals within the frequency bandwidth of approximately 300 to 3000 Hz.

The new rate structure defined in Section 5 applies to those companies showing the Local Transport rate structure with Tandem Switched Transport and Direct Trunked Transport, which are the Flat Rates for Switched Access Local Transport. (N)

(Continued)

ACCESS SERVICE

5. Switched Access Service (Cont'd) (N)

5.2 Rate Categories (Cont'd)

5.2.2 Description of the Rate Categories (Cont'd)

(A) Local Transport (Cont'd)

The access minutes are billed at the Local Transport Rate Category, which includes Tandem Switching Transport. There are also Direct Trunked Transport and Multiplexing rates. This rate structure is described on Sheet Numbers 116.1 through 116.7.

(1) Direct Trunked Transport

The Direct Trunked Transport rate elements recover a portion of the cost associated with a communications path or circuits dedicated to the use of a single customer between:

- the serving wire center and an end office,
- the service wire center and a tandem,
- the serving wire center and a hub,
- a hub and an end office,
- the serving wire center and an ADM equipped wire center where add/drop multiplexing functions are performed,
- an ADM equipped wire center and an end office.

(Continued) (N)

ACCESS SERVICE

5. Switched Access Service (Cont'd) (N)

5.2 Rate Categories (Cont'd)

5.2.2 Description of the Rate Categories (Cont'd)

(A) Local Transport (Cont'd)

(1) Direct Trunked Transport (Cont'd)

Direct Trunked Transport is not available: (1) from end offices that provide equal access through a Centralized Equal Access arrangement, or (2) from end offices that lack recording or measurement capability.

Normally, Direct Trunked Transport of originating 800 series calls from an end office is available only from Service Switching Point (SSP) equipped end offices. However, certain SSP equipped end offices cannot accommodate the direct trunking of the 800 series (other than the 800 service access code) service access code.

Three types of Direct Trunked Transport are available:

- Voice Grade 2 or 4 wire –
  an analog channel with an approximate bandwidth of 300 to 3000 Hz;
- High Capacity DS1 –
  an isochronous serial digital channel with a rate of 1.544 Mbps;
- High Capacity DS3 –
  an isochronous serial digital channel with a rate of 44.736 Mbps.

(Continued) (N)

ACCESS SERVICE

5. Switched Access Service (Cont'd) (N)

5.2 Rate Categories (Cont'd)

5.2.2 Description of the Rate Categories (Cont'd)

(A) Local Transport (Cont'd)

(1) Direct Trunked Transport (Cont'd)

High Capacity DS3 Direct Trunked Transport cannot be terminated at end offices that are not identified as hub offices that provide DS3 to DS1 multiplexing.

Additionally, DS1 Direct Trunked Transport cannot be terminated at end offices that are not identified as hub offices that provide DS1 to Voice Grade multiplexing or are not electronic end offices.

Direct Trunked Transport rates consist of a Direct Trunked Facility rate, which is applied on a per mile basis and a Direct Trunked Termination rate which is applied at each end of each measured segment of the Direct Trunked Facility (e.g., at the end office, tandem, hub, ADM equipped wire center, and serving wire center). When the Direct Trunked Facility mileage is zero, neither the Direct Trunked Facility rate nor the Direct Trunked Termination rate will apply.

The Direct Trunked Facility rate recovers a portion of the costs of transmission facilities, including intermediate transmission circuit equipment between the end points of the interoffice circuits.

(Continued) (N)

ACCESS SERVICE

5. Switched Access Service (Cont'd) (N)

5.2 Rate Categories (Cont'd)

5.2.2 Description of the Rate Categories (Cont'd)

(A) Local Transport (Cont'd)

(1) Direct Trunked Transport (Cont'd)

The Direct Trunked Termination rate recovers a portion of the costs of the circuit equipment that is necessary for the termination of each end of the Direct Trunked Facility.

The minimum period for which High Capacity DS3 Direct Trunked Transport is provided is twelve months.

(2) Tandem Switched Transport

The Tandem Switched Transport rate elements recover a portion of the costs associated with a communications path between a tandem and an end office on circuits that are switched at a tandem switch.

Tandem Switched Transport rates consist of a Tandem Switched Facility rate and a Tandem Switched Termination rate.

(Continued) (N)

ACCESS SERVICE

5. Switched Access Service (Cont'd) (N)

5.2 Rate Categories (Cont'd)

5.2.2 Description of the Rate Categories (Cont'd)

(A) Local Transport (Cont'd)

(2) Tandem Switched Transport

(a) The Tandem Switched Facility rate recovers a portion of the costs of transmission facilities, including intermediate transmission circuit equipment, between the end points of interoffice circuits. The Tandem Switched Facility rate is applied on a per access minute per mile basis for all originating and terminating minutes of use routed over the facility.

(b) The Tandem Switched Termination rate recovers a portion of the costs of circuit equipment necessary for the termination of each end of each measured segment of the Tandem Switched Facility. The Tandem Switched Termination rate is applied on a per access minute basis (for all originating and terminating minutes of use routed over the facility) at each end of each measured segment of Tandem Switched Facility (e.g., at the end office, host office and the access tandem). When the Tandem Switched Facility mileage is zero, neither the Tandem Switched Facility rate nor the Tandem Switched Termination rate will apply.

(Continued) (N)

ACCESS SERVICE

5. Switched Access Service (Cont'd) (N)

5.2 Rate Categories (Cont'd)

5.2.2 Description of the Rate Categories (Cont'd)

(A) Local Transport (Cont'd)

(3) Multiplexing

Multiplexing provides an arrangement for converting a single, higher capacity or bandwidth circuit to several lower capacity or bandwidth circuits.

When a derived channel is itself multiplexed to derive additional channels with a lesser capacity, this is referred to as cascade multiplexing. When cascade multiplexing occurs, a charge for the additional multiplexing function applies. When cascade multiplexing is performed at different hubbing locations, Direct Trunked Transport charges also apply between the hubs.

The following multiplexing arrangements are offered for use with Switched Access Service.

(a) DS3 to DS1 Multiplexing charges apply when a High Capacity DS3 Direct Trunked Transport is connected with High Capacity DS1 Direct Trunked Transport. The DS3 to DS1 multiplexer will convert a 44.736 Mbps channel to 28 DS1 channels using digital time division multiplexing.

(Continued) (N)

ACCESS SERVICE

5. Switched Access Service (Cont'd) (N)

5.2 Rate Categories (Cont'd)

5.2.2 Description of the Rate Categories (Cont'd)

(A) Local Transport (Cont'd)

(3) Multiplexing (Cont'd)

(b) DS1 to Voice Grade Multiplexing apply when a High Capacity DS1 Direct Trunked Transport is connected with Voice Grade Direct Trunked Transport. However, a DS1 to Voice Grade Multiplexing Charge does not apply when a High Capacity DS1 Direct Trunked Transport is terminated at an electronic end office and only Switched Access Service is provided over the DS1 facility (i.e., Voice Grade Special Access channels are not derived). The DS1 to Voice Grade multiplexer will convert a 1.544 Mbps channel to 24 Voice Grade channels.

(Continued) (N)

ACCESS SERVICE

5. Switched Access Service (Cont'd)

5.2 Rate Categories (Cont'd)

5.2.2 Description of the Rate Categories (Cont'd)

(A) Local Transport (Cont'd)

The Company will work cooperatively with the customer to develop routing and other local transport arrangements.

(4) Interface Groups (T)

Ten Interface Groups are provided for terminating the Local Transport at the customer's designated premises. Each Interface Group provides a specified premises interface (e.g., two-wire, four-wire, DS1, etc.). Where transmission facilities permit, the individual transmission path between the customer's designated premises and the first point of switching may at the option of the customer be provided with optional features as set forth in (2) following. The interface groups described in Section 9 and the optional features described in (2) following are non-chargeable features. No additional charges other than the rate for Local Transport apply.

(Continued)

ACCESS SERVICE

5. Switched Access Service (Cont'd)

5.2 Rate Categories (Cont'd)

5.2.2 Description of the Rate Categories (Cont'd)

(A) Local Transport (Cont'd)

(4) Interface Groups (Cont'd) (T)

As a result of the customer's access order and the type of Company transport facilities serving the customer's premises, the need for signaling conversions or two-wire to four-wire conversions, or the need to terminate digital or high frequency facilities in channel bank equipment may require that Company equipment be placed at the customer's designated premises. For example, if a voice frequency interface is ordered by the customer and the Company facilities serving the customer's designated premises are digital, then the Company channel bank equipment must be placed at the customer's designated premises in order to provide the voice frequency interface ordered by the customer.

Technical specifications concerning the available interface groups are set forth in Section 9.

(Continued)

ACCESS SERVICE

5. Switched Access Service (Cont'd)

5.2 Rate Categories (Cont'd)

5.2.2 Description of the Rate Categories (Cont'd)

(A) Local Transport (Cont'd)

(5) Non-Chargeable Optional Features (T)

Where transmission facilities permit, the Company will, at the option of the customer, provide the following non-chargeable optional features in association with Local Transport.

(a) Supervisory Signaling

Where the transmission parameters permit, and where signaling conversion is required by the customer to meets its signaling capability, the customer may order an optional supervisory signaling arrangement for each transmission path provided.

(b) Customer Specified Entry Switch Receive Level

This feature allows the customer to specify the receive transmission level at the first point of switching. The range of transmission levels which may be specified is described in Technical Reference TR-NWT-000334. This feature is available with Interface Groups 2 through 10 for Feature Groups A and B.

(Continued)

ACCESS SERVICE

5. Switched Access Service (Cont'd)

5.2 Rate Categories (Cont'd)

5.2.2 Description of the Rate Categories (Cont'd)

(A) Local Transport (Cont'd)

(5) Non-Chargeable Optional Features (Cont'd) (T)

(c) Customer Specification of Local Transport Termination

This option allows the customer to specify, for Feature Group B routed directly to an end office or access tandem, a four-wire termination of the Local Transport at the entry switch in lieu of a Company selected two-wire termination. This option is available only when the Feature Group B arrangement is provided with Type B Transmission Specifications.

(B) End Office (Local Switching)

The End Office (Local Switching) provides the local end office switching and end user termination functions necessary to complete the transmission of Switched Access communications to and from the end users served by the local end office. The End Office Rate category includes four types of functions included in the Local Switching rate elements: Common Switching, Transport Termination, Line Termination, and Intercept. (C) | (C)

(Continued)

ACCESS SERVICE

5. Switched Access Service (Cont'd)

5.2 Rate Categories (Cont'd)

5.2.2 Description of the Rate Categories (Cont'd)

(B) End Office (Local Switching) (Cont'd)

(1) Local Switching

The End Office (Local Switching) rate element provides the local end office switching functions associated with Feature Groups A, B, C, and D and the transport termination for the trunk side arrangements which terminate the Local Transport facilities.

(a) Common Switching (N)

Common Switching provides the local end office switching functions associated with the various access (i.e., Feature Group) switching arrangements. (N)

(M)

(M)

(M) 5.2.2.(B)(2) and (C) now shown on Original Sheet No. 121.3.

(Continued)

ACCESS SERVICE

5. Switched Access Service (Cont'd) (N)

5.2 Rate Categories (Cont'd)

5.2.2 Description of the Rate Categories (Cont'd)

(B) End Office (Local Switching) (Cont'd)

(1) Local Switching (Cont'd)

(b) Transport Termination

Transport Termination functions provide for the line or trunk side arrangements which terminate the Local Transport facilities.

The number of Transport Terminations provided will be determined by the Telephone Company.

(c) Line Termination

Line Termination provides for the terminations of end user lines in the local end office. There are two types of Line Terminations, i.e., Common Line Terminations and Special Access Service Terminations utilized in the provision of WATS or WATS-type services at Telephone Company designated WATS Service Offices.

(Continued) (N)

ACCESS SERVICE

5. Switched Access Service (Cont'd) (N)

5.2 Rate Categories (Cont'd)

5.2.2 Description of the Rate Categories (Cont'd)

(B) End Office (Local Switching) (Cont'd)

(1) Local Switching (Cont'd)

(c) Line Termination (Cont'd)

The Special Access Service Terminations are differentiated by line side vs. trunk side terminations. In addition, there are various types of originating and terminating line side terminations depending on the type of signaling associated with the Special Access Service. Line side terminations are available with either dial pulse or dual tone multifrequency address signaling.

(d) Intercept

The Intercept function provides for the termination of a call at a Telephone Company Intercept operator or recording. The operator or recording tells a caller why a call, as dialed, could not be completed, and if possible, provides the correct number.

(Continued) (N)

ACCESS SERVICE

5. Switched Access Service (Cont'd) (N)

5.2 Rate Categories (Cont'd)

5.2.2 Description of the Rate Categories (Cont'd)

(B) End Office (Local Switching) (Cont'd) (N)

(2) Non-Chargeable Optional Features (M)

Where facilities permit, the Company will, at the option of the customer, provided non-chargeable optional features which are listed under each Feature Group.

(C) 800 Data Base Access Service

The 800 Data Base Access Query Charge recovers cost stemming from query charges billed to the Company by the chosen 800 Data Base Service Control Point (SCP). These charges are passed directly through to the customer. (M)

(M) 5.2.2.(B)(2) and (C) previously shown on Original Sheet No. 121.

(Continued) (N)

ACCESS SERVICE

5. Switched Access Service (Cont'd)

5.2 Rate Categories (Cont'd)

5.2.2 Description of the Rate Categories (Cont'd)

(C) 800 Data Base Access Service (Cont'd)

There are two types of query charges: basic and vertical. A Basic Query Charge is assessed for an 800 data base query that requests only information identifying the IXC for the call. The Vertical Query Charge is assessed for 800 data base queries requiring more sophisticated routing instructions, (i.e., POTS Translation time of day routing).

5.3 Provision and Description of Switched Access Service Feature Groups

Switched Access Service is provided in four different Feature Group arrangements. The provision of each Feature Group requires Local Transport facilities and the appropriate End Office functions.

There are three specific transmission specifications (i.e., Types A, B, and C) that have been identified for the provision of Feature Groups. The specifications provided are dependent on the Interface Group and the routing of the service, i.e., whether the service is routed directly to the end office or via an access tandem.

Feature Groups are arranged for either originating, terminating, or two-way calling, based on the customer end office switching capacity ordered. Originating calling permits the delivery of calls from the Company exchange locations to the customer's premises. Terminating calling permits the delivery of calls from the customer's premises to the Company exchange location. Two-way calling permits the delivery of calls in both directions, but not simultaneously. The Company will determine the type of calling to be provided unless the customer requests that a different type of directional calling is to be provided. In such cases, the Company will work cooperatively with the customer to determine the directionality.

(Continued)

ACCESS SERVICE

5. Switched Access Service (Cont'd)

5.3 Provision and Description of Switched Access Service Feature Groups (Cont'd)

Following are detailed descriptions of each of the available Feature Groups. Each Feature Group is described in terms of its specific physical characteristics and calling patterns, the transmission specifications with which it is provided, the optional features available for use with it, and the standard testing capabilities

5.3.1 Feature Group A (FGA)

(A) Description

(1) FGA is provided in connection with the Company electronic end offices. At the option of the customer, FGA is provided on a single or multiple line group basis and is arranged for originating calling only, terminating calling only, or two-way calling. FGA is arranged for use by the customer in the provision of its FX/ONAL service or MTS/WATS-type service.

Foreign Exchange (FX) is a telephone exchange service furnished to a customer through a central office of an exchange other than the exchange in which the customer is located. ONAL is an Off Network Access Line used by customers for providing off network calling capability for their private communications systems. MTS/WATS-type service is a MTS/WATS equivalent service provided by interexchange carriers other than AT&T.

(Continued)

ACCESS SERVICE

5. Switched Access Service (Cont'd)

5.3 Provision and Description of Switched Access Service Feature Groups (Cont'd)

5.3.1 Feature Group A (FGA) (Cont'd)

(A) Description (Cont'd)

(2) FGA provides a line side termination at the first point of switching. The line side termination will be provided with either ground start supervisory signaling or loop start supervisory signaling. The type of signaling is at the option of the customer.

(3) The Company shall select the first point of switching at which the line side termination is to be provided unless the customer requests a different first point of switching and the Company facilities and measurement capabilities, where necessary, are available to accommodate such a request.

(4) A seven-digit local telephone number assigned by the Company is provided for access to FGA switching the originating direction. The seven-digit local telephone number will be associated with the selected end office switch and is of the form NXX-XXXX.

If the customer requests a specified seven-digit telephone number that is not currently assigned, and if the Company can, with reasonable effort, comply with that request, the requested number will be assigned to the customer.

(Continued)

ACCESS SERVICE

5. Switched Access Service (Cont'd)

5.3 Provision and Description of Switched Access Service Feature Groups (Cont'd)

5.3.1 Feature Group A (FGA) (Cont'd)

(A) Description (Cont'd)

(5) FGA switching, when used in the terminating direction, is arranged with dial tone start-dial signaling. When used in the terminating direction FGA switching may, at the option of the customer, be arranged for dial pulse or dual tone multi-frequency address signaling, subject to availability of equipment at the first point of switching. When FGA switching is provided in a hunt group or uniform call distribution arrangement, all FGA switching will be arranged for the same type of address signaling.

(6) No address signaling is provided by the Company when FGA Switching is used in the originating direction. Address signaling in such cases, if required by the customer, must be provided by the customer's end user using inband tone signaling techniques. Such inband tone address signals will not be regenerated by the Company and will be subject to the ordinary transmission capabilities of the Local Transport provided.

(Continued)

ACCESS SERVICE

5. Switched Access Service (Cont'd)

5.3 Provision and Description of Switched Access Service Feature Groups (Cont'd)

5.3.1 Feature Group A (FGA) (Cont'd)

(A) Description (Cont'd)

(7) FGA Switching, when used in the terminating direction, may be used to access the Company specified set of valid NXXs within the Company local exchange calling area, local operator service (0- and 0+), Directory Assistance (411 where available and 555-1212), emergency reporting service (911 where available), exchange telephone repair (611 where available), time or weather announcement services of the Company, community information services of an information service provider, and other customer services (by dialing the appropriate digits.)

Charges for FGA terminating calls requiring operator assistance or calls to 611 or 911 will only apply where sufficient call details are available. Additional non-access charges will also be billed on a separate account for (1) an operator surcharge, for local operator assistance (0- and 0+) calls, (2) calls to certain community information services, and (3) calls from a FGA line to another customer's service in accordance with that customer's applicable service rates when the Company performs the billing function for that customer.

(Continued)

ACCESS SERVICE

5. Switched Access Service (Cont'd)

5.3 Provision and Description of Switched Access Service Feature Groups (Cont'd)

5.3.1 Feature Group A (FGA) (Cont'd)

(A) Description (Cont'd)

(7) (Cont'd)

For calls to Directory Assistance, additional non-access charges may also be billed at the applicable rates under the Company local exchange tariff.

(8) When a FGA switching arrangement for an individual customer (a single line or entire hunt group) is discontinued at an end office, an intercept announcement is provided. This arrangement provides, for a limited period of time, an announcement that the service associated with the number dialed has been disconnected.

(B) Optional Features

(1) Common Switching Optional Features

(a) Hunt Group Arrangement
(b) Uniform Call Distribution Arrangement
(c) Nonhunting Number for Use with Hunt Group Arrangement or Uniform Call Distribution Arrangement
(d) Call Denial
(e) Service Code Denial

(Continued)

ACCESS SERVICE

5. Switched Access Service (Cont'd)

5.3 Provision and Description of Switched Access Service Feature Groups (Cont'd)

5.3.1 Feature Group A (FGA) (Cont'd)

(B) Optional Features (Cont'd)

(2) Transport Termination Optional Features

(a) Two-way operation with dial pulse address signaling and loop start supervisory signaling
(b) Two-way operation with dial pulse address signaling and group start supervisory signaling
(c) Two-way operation with dual tone multi-frequency address signaling and loop start supervisory signaling
(d) Two-way operation with dual tone multi-frequency address signaling and ground start supervisory signaling
(e) Terminating operation with dial pulse address signaling and loop start supervisory signaling
(f) Terminating operation with dial pulse address signaling and ground start supervisory signaling and ground start supervisory signaling
(g) Terminating operation with dual tone multi-frequency address signaling and loop start supervisory signaling
(h) Terminating operation with dual tone multi-frequency address signaling and ground start supervisory signaling
(i) Originating operation with loop start supervisory signaling
(j) Originating operation with ground start supervisory signaling.

(Continued)

ACCESS SERVICE

5. Switched Access Service (Cont'd)

5.3 Provision and Description of Switched Access Service Feature Groups (Cont'd)

5.3.1 Feature Group A (FGA) (Cont'd)

(B) Optional Features (Cont'd)

(3) Local Transport Optional Features

(a) Supervisory Signaling
(b) Customer Specified Entry Switch Receive Level

(4) Certain other features which may be available in connection with FGA are provided under the Company's exchange service tariff.

(C) Transmission Specifications

FGA is provided with either Type B or Type C Transmission Specifications. The specifications for the associated parameters are guaranteed to the first point of switching. Type C Transmission Specifications are provided with Interface Group 1 and Type B is provided with Interface Groups 2 through 10. Type DB Data Transmission Parameters are provided with FGA to the first point of switching.

(Continued)

ACCESS SERVICE

5. Switched Access Service (Cont'd)

5.3 Provision and Description of Switched Access Service Feature Groups (Cont'd)

5.3.1 Feature Group A (FGA) (Cont'd)

(D) Testing Capabilities

FGA is provided, in the terminating direction where equipment is available, with seven-digit access to balance (100 type) test line and milliwatt (102 type) test line. This test is included with the installation of service. Additional testing services are available as set forth in Section 7. following for FGA.

(1) Acceptance Testing

At no additional charge, the Company will, at the customer's request, cooperatively test, at the time of installation, the following parameters: loss, C-notched noise, C-message noise, 3-tone slope, d.c. continuity and operational signaling.

(2) Routine Testing

At no additional charge, the Company will, at the customer's request, test after installation on an automatic or manual basis, 1004 Hz loss, C-message noise and Balance (Return loss). In the case of automatic testing, the customer shall provide remote office test lines and 105 test lines with associated responders or their functional equivalent.

(Continued)

ACCESS SERVICE

5. Switched Access Service (Cont'd)

5.3 Provision and Description of Switched Access Service Feature Groups (Cont'd)

5.3.2 Feature Group B (FGB)

(A) Description

(1) FGB, when directly routed to an end office (i.e., provided without the use of an access tandem switch), is provided at appropriately equipped electronic end office switches.

(2) FGB is provided as trunk side switching through the use of end office or access tandem switch trunk equipment. The switch trunk equipment is provided with wink start start-pulsing signals and answer and disconnect supervisory signaling.

(3) FGB switching is provided with multi-frequency address signaling in both the originating and terminating directions. Except for FGB switching provided with automatic number identification (ANI) or rotary dial station signaling arrangements any other address signaling in the originating direction, if required by the customer, must be provided by the customer's end user using inband tone signaling techniques. Such inband tone address signals will not be regenerated by the Company and will be subject to the ordinary transmission capabilities of the Local Transport provided.

(Continued)

ACCESS SERVICE

5. Switched Access Service (Cont'd)

5.3 Provision and Description of Switched Access Service Feature Groups (Cont'd)

5.3.2 Feature Group B (FGB) (Cont'd)

(A) Description (Cont'd)

(4) The access code for FGB switching is a uniform access code. The form of the uniform access code is 950-1XXX or 950-0XXX for carriers. One uniform access code will be assigned to the customer for the customer's domestic communications and another will be assigned to the customer for its international communications, if required. These uniform access codes will be the assigned access numbers of all FGB switched access service provided to the customer by the Company.

(5) FGB Switching, when used in the terminating direction, may be used to access valid NXXs in the LATA, time or weather announcement services of the Company, community information services of an information service provider and other customers' services (by dialing the appropriate digits). When directly routed to an end office, only those valid NXX codes served by that end office may be accessed. When routed through an access tandem, only those valid NXX codes serviced by end offices subtending the access tandem may be accessed.

(Continued)

ACCESS SERVICE

5. Switched Access Service (Cont'd)

5.3 Provision and Description of Switched Access Service Feature Groups (Cont'd)

5.3.2 Feature Group B (FGB) (Cont'd)

(A) Description (Cont'd)

(5) (Cont'd)

The customer will also be billed additional non-access charges for calls to certain community information services for which rates are applicable. Additionally, non-access charges will also be billed for calls from a FGB trunk to another customer's service in accordance with that customer's applicable service rates when the Company performs the billing function for that customer. Calls in the terminating direction will not be completed to 950-1XXX or 950-0XXX access codes, local operator assistance (0- and 0+), Directory Assistance (411 and 555-1212), service codes 611 and 911 or 101XXXX access codes. FGB may not be switched, in the terminating direction, to Switched Access Service Feature Groups B, C, and D.

(6) The Company will establish a trunk group or groups for the customer at end office switches where FGB switching is provided. When required by technical limitations, a separate trunk group will be established for each type of FGB switching arrangement provided. Different types of FGB or other switching arrangements may be combined in a single trunk group at the option of the Company.

(Continued)

ACCESS SERVICE

5. Switched Access Service (Cont'd)

5.3 Provision and Description of Switched Access Service Feature Groups (Cont'd)

5.3.2 Feature Group B (FGB) (Cont'd)

(A) Description (Cont'd)

(7) When all FGB switching arrangements are discontinued, an intercept announcement is provided. This arrangement provides, for a limited period of time, an announcement that the service associated with the umber dialed has been disconnected.

(B) Optional Features

(1) Common Switching Optional Features

(a) Automatic Number Identification (ANI)
(b) Up to Seven-digit Outpulsing of Access Digits to Customer

(2) Transport Termination Optional Features

(a) Rotary Dial Station Signaling

(3) Local Transport Optional Features

(a) Customer Specification of Local Transport Termination
(b) Supervisory Signaling
(c) Customer Specified Entry Switch Receive Level

(Continued)

ACCESS SERVICE

5. Switched Access Service (Cont'd)

5.3 Provision and Description of Switched Access Service Feature Groups (Cont'd)

5.3.2 Feature Group B (FGB) (Cont'd)

(C) Transmission Specifications

FGB is provided with either Type B or Type C Transmission Specifications. The specifications for the associated parameters are guaranteed to the end office when routed directly or to the first point of switching when routed via an access tandem. Type C Transmission Specifications are provided with Interface Group 1 and Type B is provided with Interface Groups 2 through 10. Type DB Data Transmission Parameters are provided with FGB to the first point of switching.

(D) Testing Capabilities

FGB is provided, in the terminating direction where equipment is available, with seven-digit access to balance (100 type) test line, milliwatt (102 type) test line, nonsynchronous or synchronous test line, automatic transmission measuring (105 type) test line, data transmission (107 type) test line, loop around test line, short circuit test line, and open circuit test line. Additional testing services are available as set forth in Section 7. following for FGB.

(1) Acceptance Testing

At no additional charge, the Company will, at the customer's request, cooperatively test, at the time of installation, the following parameters: loss, C-notched noise, C-message noise, 3-tone slope, d.c. continuity and operational signaling.

(Continued)

ACCESS SERVICE

5. Switched Access Service (Cont'd)

5.3 Provision and Description of Switched Access Service Feature Groups (Cont'd)

5.3.2 Feature Group B (FGB) (Cont'd)

(D) Testing Capabilities (Cont'd)

(2) Routine Testing

At no additional charge, the Company will, at the customer's request, test after installation on an automatic or manual basis, 1004 Hz loss, C-message noise and Balance (Return loss). In the case of automatic testing, the customer shall provide remote office test lines and 105 test lines with associated responders or their functional equivalent.

5.3.3 Feature Group C (FGC)

(A) Description

(1) FGC Access, which is available only to providers of MTS and WATS, provides trunk side access to the Company end office switches for the customer's use in originating and terminating communications. IC's will be offered Feature Group D.

(2) The switch trunk equipment is provided with answer and disconnect supervisory signaling. Wink start start-pulsing signals are provided in all offices where available. In those offices where wink start start-pulsing signals are not available, delay dial start-pulsing signals will be provided, unless immediate dial pulse signaling is provided, in which case no start-pulsing signals are provided.

(Continued)

ACCESS SERVICE

5. Switched Access Service (Cont'd)

5.3 Provision and Description of Switched Access Service Feature Groups (Cont'd)

5.3.3 Feature Group C (FGC) (Cont'd)

(A) Description (Cont'd)

(3) FGC is provided with multi-frequency address signaling. Up to 12 digits of the called party number dialed by the customer's end user using dual tone multi-frequency or dial pulse address signals will be provided by the Company equipment to the customer's premises where the Switched Access Service terminates. Such called party number signals will be subject to the ordinary transmission capabilities of the Local Transport provided.

(4) No access code is required for FGC switching. The telephone number dialed by the customer's end user shall be a seven or ten digit number for calls in the North American Numbering Plan (NANP). The form of the numbers dialed by the customer's end user is NXX-XXXX, 0 or 1 + NXX-XXXX, NPA + NXX-XXXX, 0 or 1 + NPA + NXX-XXXX.

(Continued)

ACCESS SERVICE

5. Switched Access Service (Cont'd)

5.3 Provision and Description of Switched Access Service Feature Groups (Cont'd)

5.3.3 Feature Group C (FGC) (Cont'd)

(A) Description (Cont'd)

(5) FGC switching, when used in the terminating direction, may be used to access valid NXXs, time or weather announcement services of the Company, community information services of an information provider, and other customers' services (by dialing the appropriate codes) when the services can be reached using valid NXX codes. When directly routed to an end office, only those valid NXX codes served by that office may be accessed. Non-access charges will be billed for calls from a FGC trunk to another customer's service in accordance with that customer's applicable service rates when the Company performs the billing function for that customer. Calls in the terminating direction will not be completed to 950-0XXX or 950-1XXX access codes, local operator assistance (0- and 0+), Directory Assistance service codes 611 and 911, and 101XXXX access codes. FGC may not be switched, in the terminating direction, to Switched Access Service Feature Groups B, C, or D.

(Continued)

ACCESS SERVICE

5. Switched Access Service (Cont'd)

5.3 Provision and Description of Switched Access Service Feature Groups (Cont'd)

5.3.3 Feature Group C (FGC) (Cont'd)

(A) Description (Cont'd)

(6) The Company will establish a trunk group or groups for the customer at end office switches where FGC switching is provided. When required by technical limitations, a separate trunk group will be established for each type of FGC switching arrangement provided. Different types of FGC or other switching arrangements may be combined in a single trunk group at the option of the Company.

(B) Optional Features

(1) Common Switching Optional Features

(a) Automatic Number Identification
(b) Service Class Routing
(c) Dial Pulse Address Signaling
(d) Revertive Pulse Address Signaling
(e) Delay Dial Start-Pulsing Signaling
(f) Immediate Dial Pulse Address Signaling
(g) Panel Call Indicator Address Signaling
(h) Alternate Traffic Routing
(i) Trunk Access Limitation

(Continued)

ACCESS SERVICE

5. Switched Access Service (Cont'd)

5.3 Provision and Description of Switched Access Service Feature Groups (Cont'd)

5.3.3 Feature Group C (FGC) (Cont'd)

(B) Optional Features (Cont'd)

(1) Common Switching Optional Features (Cont'd)

(j) End Office End User Line Service Screening for Use with WATS Access Lines
(k) Hunt Group Arrangement for Use with WATS Access Lines
(l) Uniform Call Distribution Arrangement for Use with WATS Access Lines
(m) Nonhunting Number for Use with Hunt Group Arrangement or Uniform Call Distribution Arrangement for Use with WATS Access Lines.
(n) Band Advance Arrangement for Use with WATS Access Lines

(2) Transport Termination Optional Features

(a) Operator Trunks - i.e., Coin, Non-Coin, and Combined Coin, and Non-Coin. (Non-Coin electronic end offices. Coin and Combined Coin and Non-Coin are provided only at Company electronic end offices and other Company end offices where equipment is available).

(3) Local Transport Optional Features

(a) Supervisory Signaling

(Continued)

ACCESS SERVICE

5. Switched Access Service (Cont'd)

5.3 Provision and Description of Switched Access Service Feature Groups (Cont'd)

5.3.3 Feature Group C (FGC) (Cont'd)

(C) Transmission Specifications

(1) FGC is provided with either Type B or Type C Transmission Specifications as follows:

(a) When routed directly to the end office either Type B or Type C is provided.

(b) When routed to an access tandem only Type B is provided.

(c) Type B or Type C is provided on the transmission path from the access tandem to the end office.

(2) Type C Transmission Specifications are provided with Interface Group 1 when routed directly to an end office. Type B is provided with Interface Groups 2 through 10, when routed directly to an end office.

(3) Type DB Data Transmission Parameters are provided with FGC for the transmission path between the customer's premises and the end office when directly routed to the end office, and Type DB Data Transmission Parameters are provided for the transmission path between the customer's premises and the access tandem and between the access tandem and the end office when routed via an access tandem.

(Continued)

ACCESS SERVICE

5. Switched Access Service (Cont'd)

5.3 Provision and Description of Switched Access Service Feature Groups (Cont'd)

5.3.3 Feature Group C (FGC) (Cont'd)

(D) Testing Capabilities

FGC is provided, in the terminating direction where equipment is available, with seven-digit access to balance (100 type) test line, milliwatt (102 type) test line, nonsynchronous or synchronous test line, automatic transmission measuring (105 type) test line, data transmission (107 type) test line, loop around test line, short circuit test line, and open circuit test line. Additional testing services are available as set forth in Section 7. following for FGC.

(1) Acceptance Testing

At no additional charge, the Company will, at the customer's request, cooperatively test, at the time of installation, the following parameters: loss, C-notched noise, C-message noise, 3-tone slope, d.c. continuity and operational signaling.

When FGC with SS7 Signaling or CCSAC option is ordered, network compatibility and other operational tests will be performed cooperatively by the customer, the Company, and any agents contacted to provide CCSAC.

(Continued)

ACCESS SERVICE

5. Switched Access Service (Cont'd)

5.3 Provision and Description of Switched Access Service Feature Groups (Cont'd)

5.3.3 Feature Group C (FGC) (Cont'd)

(D) Testing Capabilities (Cont'd)

(2) Routine Testing

At no additional charge, the Company will, at the customer's request, test after installation on an automatic or manual basis, 1004 Hz loss, C-message noise and Balance (Return loss). In the case of automatic testing, the customer shall provide remote office test lines and 105 test lines with associated responders or their functional equivalent.

5.3.4 Feature Group D (FGD)

(A) Description

(1) FGD is provided at Company designated end office switches whether routed directly to an end office or via Company designated electronic access tandem switches.

(2) FGD is provided as trunk side switching through the use of end office or access tandem switch trunk equipment. The switch trunk equipment is provided with wink start start-pulsing signals and answer and disconnect supervisory signaling. When FGD with SS7 Signaling is ordered, no inband signaling is provided.

(Continued)

ACCESS SERVICE

5. Switched Access Service (Cont'd)

5.3 Provision and Description of Switched Access Service Feature Groups (Cont'd)

5.3.4 Feature Group D (FGD) (Cont'd)

(A) Description (Cont'd)

(3) FGD switching, when used in the originating direction, is provided with multi-frequency address signaling or out of band SS7 signaling. Up to 12 digits of the called party number dialed by the customer's end user using dual tone multi-frequency or dial pulse address signals will be provided by the Company's equipment to the customer's premises where the Switched Access Service terminates. Such address signals will be subject to the ordinary transmission capabilities of the Local Transport provided.

(4) FGD switching, when used in the terminating direction, may be used to access valid NXXs, time, or weather announcement services of the Company, community information services of an information service provider, and other customer services (by dialing the appropriate codes) when such services can be reached using valid NXX codes. When directly routed to an end office, only those valid NXX codes served by that office may be accessed. When routed through an access tandem, only those valid NXX codes served by end offices subtending the access tandem may be accessed.

(Continued)

ACCESS SERVICE

5. Switched Access Service (Cont'd)

5.3 Provision and Description of Switched Access Service Feature Groups (Cont'd)

5.3.4 Feature Group D (FGD) (Cont'd)

(A) Description (Cont'd)

(4) (Cont'd)

The customer will also be billed additional non-access charges for calls to certain community information services. Additionally, non-access charges will also be billed for calls from an FGD trunk to another customer's service in accordance with that customer's applicable service rates when the Company performs the billing function for that customer. Calls in the terminating direction will not be completed to 950-0XXX or 950-1XXX access codes, local operator assistance (0- and 0+), Directory Assistance (411 and 555-1212), service codes 611 and 911 and 101XXXX access codes. Calls will be completed to Directory Assistance (NPA-555-1212 or 555-1212) when FGD switching is combined with Directory Assistance Switching. FGD may not be switched, in the terminating direction, to Switched Access Service Feature Groups B, C, or D.

(5) The Company will establish a trunk group or groups for the customer at end office switches or access tandem switches where FGD switching is provided. When required by technical limitations, a separate trunk group will be established for each type of FGD switching arrangement provided. Different types of FGD or other switching arrangements may be combined in a single trunk group at the option of the Company.

(Continued)

ACCESS SERVICE

5. Switched Access Service (Cont'd)

5.3 Provision and Description of Switched Access Service Feature Groups (Cont'd)

5.3.4 Feature Group D (FGD) (Cont'd)

(A) Description (Cont'd)

(6) The access code for FGD switching is a uniform access code of the form 101XXXX. A single access code will be the assigned number of all FGD access provided to the customer by the Company. No access code is required for calls to a customer over FGD Switched Access Service if the end user's telephone exchange service is arranged for presubscription to that customer.

Where no access code is required, the number dialed by the customer's end user shall be a seven or ten digit number for calls in the North American Numbering Plan (NANP). The form of the number dialed by the customer's end user is NXX-XXXX, 0- or 1 + NXX-XXXX, NPA + NXX-XXXX, 0 or 1 + NPA + NXX-XXXX. When the 10XXX access code is used, FGD Switching also provides for dialing the digit 0 for access to the customer's operator, 911 for access to the Company's emergency reporting service, or the end-of-dialing digit (#) for cut-through access to the customer's premises.

(Continued)

ACCESS SERVICE

5. Switched Access Service (Cont'd)

5.3 Provision and Description of Switched Access Service Feature Groups (Cont'd)

5.3.4 Feature Group D (FGD) (Cont'd)

(A) Description (Cont'd)

(7) FGD switching will be arranged to accept calls from telephone exchange service locations without the need for dialing 101XXXX uniform access code. Each telephone exchange service line may be marked with a presubscription code to identify which 101XXXX code its calls will be directed to for interLATA service.

(B) Optional Features

(1) Common Switching Optional Features

(a) Automatic Number Identification
(b) Service Class Routing
(c) Alternate Traffic Routing
(d) Call Gapping Arrangement
(e) Trunk Access Limitation
(f) International Carrier Option
(g) End Office End User Line Service Screening for Use with WATS Access Lines
(h) Hunt Group Arrangement for Use with WATS Access Lines

(Continued)

ACCESS SERVICE

5. Switched Access Service (Cont'd)

5.3 Provision and Description of Switched Access Service Feature Groups (Cont'd)

5.3.4 Feature Group D (FGD) (Cont'd)

(B) Optional Features (Cont'd)

(1) Common Switching Optional Features (Cont'd)

(i) Uniform Call Distribution Arrangement for Use with WATS Access Lines
(j) Nonhunting Number for Use with Hunt Group Arrangement or Uniform Call Distribution Arrangement for Use with WATS Access Lines
(k) Band Advance Arrangement for Use with WATS Access Lines

(2) Transport Termination Optional Features

(a) Operator Trunk, Full Feature Arrangement

(3) Local Transport Optional Features

(a) Supervisory Signaling

(Continued)

ACCESS SERVICE

5. Switched Access Service (Cont'd)

5.3 Provision and Description of Switched Access Service Feature Groups (Cont'd)

5.3.4 Feature Group D (FGD) (Cont'd)

(C) Transmission Specifications

(1) FGD is provided with either Type A, Type B, or Type C Transmission Specifications as follows:

(a) When routed directly to the end office either Type B or C is provided.

(b) When routed to an access tandem only Type A is provided.

(c) Type A is provided on the transmission path from the access tandem to the end office.

(2) Type C Transmission specifications are provided with Interface Group 1. Type A and Type B Transmission Specifications are provided with Interface Groups 2 through 10.

(3) Type DA Data Transmission Parameters are provided for the transmission path between the customer's premises and the access tandem and between the access tandem and the end office. Type DB Data Transmission Parameters are provided with FGD for the transmission path between the customer's premises and the end office when directly routed to the end office.

(Continued)

ACCESS SERVICE

5. Switched Access Service (Cont'd)

5.3 Provision and Description of Switched Access Service Feature Groups (Cont'd)

5.3.4 Feature Group D (FGD) (Cont'd)

(D) Testing Capabilities

FGD is provided, in the terminating direction where equipment is available, with seven-digit access to balance (100 type) test line, milliwatt (102 type) test line, nonsynchronous or synchronous test line, automatic transmission measuring (105 type) test line, data transmission (107 type) test line, loop around test line, short circuit test line, and open circuit test line. These tests are included with the installation of service. Additional testing services are available as set forth in Section 7.

5.3.5 800 Data Base Access Service

(A) Description

(1) 800 Data Base Access Service utilizes the SS7 network, to query an 800 data base to identify the customer to whom the call will be delivered and provide vertical features based on the dialed ten digits. 800 Data Base Access Service is provided to all customers in conjunction with FGC/FGD Switched Access service.

(2) A Basic or Vertical Feature Query charge is assessed for each completed query launched to the data base whether or not the actual call is delivered to the customer. The query is considered completed when the appropriate call routing information is returned to the SSP that launched the call.

(Continued)

ACCESS SERVICE

5. Switched Access Service (Cont'd)

5.3 Provision and Description of Switched Access Service Feature Groups (Cont'd)

5.3.5 800 Data Base Access Service (Cont'd)

(A) Description (Cont'd)

(3) The Basic Query includes the following two features:

(a) Identification of the customer to whom the call should be delivered.

(b) Area of service routing which allows routing of 800 series calls by the Company to different ICs based on the LATA in which the call originates.

(4) The Vertical Feature Query provides the basic customer identification function in addition to vertical features, which may include:

(a) Call validation (ensuring that calls originate from subscribed service area);

(b) POTS translation of 800 series numbers (which is generally necessary for the routing and completion of 800 series calls);

(Continued)

ACCESS SERVICE

5. Switched Access Service (Cont'd)

5.3 Provision and Description of Switched Access Service Feature Groups (Cont'd)

5.3.5 800 Data Base Access Service (Cont'd)

(A) Description (Cont'd)

(4) (Cont'd)

(c) Alternate POTS translation (allows the subscriber to vary the routing of 800 series calls based on factors such as time of day, place of origination of the call, etc.); and

(d) Multiple carrier routing (which allows subscribers to route to different carriers based on factors similar to those in (4)(c), above.

(5) The Company will bill the Vertical Feature Query charge in lieu of the Basic Query Charge when the data base indicates any vertical features were included in the query. When a Vertical Feature Query is provided, only one query charge applies regardless of the number of vertical features provided.

(Continued)

ACCESS SERVICE

5. Switched Access Service (Cont'd)

5.4 Transmission Specifications

5.4.1 Each Switched Access Service transmission path is provided with standard transmission parameter limits. The standard for a particular transmission path is dependent on the Switched Access Service, the Interface Group, and whether the service is directly routed to an end office or routed to the access tandem or a customer-provided tandem utilizing tandem switching functions. The available transmission parameter limits are set forth in Technical Reference PUB GR-334-CORE and associated addenda. Data transmission parameter limits are also provided with each Switched Access Service transmission path. The Company will, upon notification by the customer that the data parameters set forth in Technical Reference PUB GR-334-CORE and associated addenda are not being met, conduct test independently or in cooperation with the customer, and take any necessary action to ensure that the data parameters are met.

5.4.2 The transmission parameter limits contained in this section are Immediate Action Limits. Acceptance Limits are set forth in Technical Reference PUB GR-334-CORE and associated addenda. This technical reference also provides the basis for determining Switched Access Service maintenance limits.

5.4.3 Transmission specifications for SS7 Out of Band Signaling are delineated in Technical Reference PUB GR-394-CORE, TR-TSV-000905.

(Continued)

ACCESS SERVICE

5. Switched Access Service (Cont'd)

5.4 Transmission Specifications (Cont'd)

5.4.4 Transmission specifications and error performance parameters for DS1 level digital transmission on FGD Service equipped with Clean Channel Capability are delineated in Technical Reference PUB GR-334-CORE.

5.4.5 When Switched Access FGD Service is provided via a customer-provided tandem premises, the technical transmission specifications for the customer-provided tandem must conform with the technical specifications established for Company access tandem switches. These specifications are described in Technical Reference PUB FR-64 and GR-334-CORE. For FGD trunks with tandem signaling information, the transmission parameter limits and interface combinations are delineated in Bellcore Generic Requirements GR-334-CORE.

5.5 Obligations of the Telephone Company

In addition to the obligations of the Company set forth in Section 2, preceding, the Company has certain other obligations pertaining only to the provisions of Switched Access Service. These obligations are as follows:

(Continued)

ACCESS SERVICE

5. Switched Access Service (Cont'd)

5.5 Obligations of the Telephone Company (Cont'd)

5.5.1 Network Management

The Company will administer its network to ensure the provision of acceptable service levels to all telecommunications users of the Company's network services. Generally, service levels are considered acceptable only when both end users and customers are able to establish connections with little or no delay encountered within the Company network. The Company maintains the right to apply protective controls; i.e., those actions, such as call gapping, which selectively cancel the completion of traffic, over any traffic carried over its network, including that associated with a customer's Switched Access Service. Generally, such protective measures would only be taken as a result of occurrences such as failure or overload of Company or customer facilities, natural disasters, mass calling, or national security demands. In the event that the protective controls applied by the Company result in the complete loss of service by the customer, the customer will be granted a Credit Allowance for Service Interruption as set forth in Section 2.4.3.

(Continued)

ACCESS SERVICE

5. Switched Access Service (Cont'd)

5.5 Obligations of the Telephone Company (Cont'd)

5.5.2 Design and Traffic Routing of Switched Access Service

For Feature Groups C and D, the Company shall design and determine the routing of Switched Access Service, including the selection of the first point of switching and the selection of facilities from the interface to any switching point and to the end offices where busy hour minutes of capacity are ordered. The Company shall also decide if capacity is to be provided by originating only, terminating only, or two-way trunk groups. Finally, the Company will decide whether trunk side access will be provided through the use of two-wire or four-wire trunk terminating equipment. Selection of the facilities and equipment and traffic routing of the service are based on standard engineering methods, available facilities, and equipment, and the Company traffic routing plans. If the customer desires routing or directionality different from that determined by the Company, the Company will work cooperatively with the customer in determining (1) whether the service is to be routed directly to an end office or through an access tandem switch and (2) the directionality of the service.

For Feature Groups A and B, the link or trunk directionality and traffic routing of the Switched Access Service between the customer's premises and the entry switch are determined by the customer's order for service. Additionally, for Feature Group B the customer may order the optional feature Customer Specification of Local Transport Termination.

(Continued)

ACCESS SERVICE

5. Switched Access Service (Cont'd)

5.5 Obligations of the Telephone Company (Cont'd)

5.5.3 Provision of Service Performance Data

Subject to availability, end-to-end service performance data available to the Company through its own service evaluation routines, may also be made available to the customer based on previously arranged intervals and format. This data provides information on overall end-to-end call completion and non-completion performance; i.e., customer equipment blockage, failure results, and transmission performance. This data does not include service performance data which are provided under other tariff sections; i.e., testing service results. If data is provided in other than paper format, the charges for such exchange will be determined on an individual case basis.

5.5.4 Trunk Group Measurement Reports

Subject to availability, the Company will make available trunk group data in the form of usage in CCS, peg count, and overflow, to the customer based on previously agreed to intervals.

(Continued)

ACCESS SERVICE

5. Switched Access Service (Cont'd)

5.5 Obligations of the Telephone Company (Cont'd)

5.5.5 Determination of Number of Transmission Paths

For Feature Groups A and B, which are ordered on a per-line or per-trunk basis respectively, the customer specifies the number of transmission paths in the order for service. The Company will determine the number of Switched Access Service transmission paths to be provided for the Switched Access Feature Group C or D busy hour minutes of capacity ordered. A transmission path is a communication path within the frequency bandwidth of approximately 300 to 3000 Hz or a derived communication path of frequency bandwidth of approximately 300 Hz to 3000 Hz provided over a high frequency analog facility or a high speed digital facility between a customer's premises and the Company location. The number of transmission paths will be developed using the total busy hour minutes of capacity by type for the end offices for each Feature Group ordered from a customer's premises. The total busy hour minutes of capacity by type for the end office will be converted to transmission paths using standard Telephone Company traffic engineering methods. The number of transmission paths provided shall be the number required based on (1) the use of end office switches, (2) the use of tandem switches only, or (3) the combination of the two type switches.

5.5.6 Design Blocking Measurement

The Company will design the facilities used in the provision of Switched Access Service to meet the blocking probability criteria as set forth in (A) through (D), following.

(Continued)

ACCESS SERVICE

5. Switched Access Service (Cont'd)

5.5 Obligations of the Telephone Company (Cont'd)

5.5.6 Design Blocking Measurement (Cont'd)

(A) For Feature Groups A and B no design blocking criteria apply.

(B) For Feature Group C, the design blocking objective will be no greater than one percent (.01) between the point of termination at the customer's premises and the first point of switching when traffic is directly routed without an alternate route. Standard traffic engineering methods will be used by the Company to determine the number of transmission paths required to achieve this level of blocking.

(C) For Feature Group D, the design blocking objective will be no greater than one percent (.01) between the point of termination at the customer's premises and the end office switch, when the traffic is directly routed without an alternate route. Standard traffic engineering methods will be used to determine the number of transmission paths required to achieve this level of blocking.

(Continued)

ACCESS SERVICE

5. Switched Access Service (Cont'd)

5.5 Obligations of the Telephone Company (Cont'd)

5.5.6 Design Blocking Measurement (Cont'd)

(D) The Company will perform routine measurement functions except on Feature Groups A and B, to assure than an adequate number of transmission paths are in service. The Company will recommend that additional capacity (i.e., busy hour minutes of capacity or trunks) be ordered by the customer when additional paths are required to reduce the measured blocking to the designed blocking level. For the capacity ordered, the design blocking objective is assumed to have been met if the routine measurements show that the measured blocking does not exceed the threshold listed in the following tables.

(1) For transmission paths carrying only first routed traffic direct between an end office and customer's premises without an alternate route, and for paths carrying only overflow traffic, the measured blocking thresholds are as follows:

(Continued)

ACCESS SERVICE

5. Switched Access Service (Cont'd)

5.5 Obligations of the Telephone Company (Cont'd)

5.5.6 Design Blocking Measurement (Cont'd)

(D) (Cont'd)

(1) (Cont'd)

Number of Transmission Paths Per Trunk Group	Measured Blocking Thresholds in the Time Consistent Busy Hour for the Number of Measurements Taken Between 8:00 a.m. and 11:00 p.m. Per Trunk Group			
	15-20 Measurements	11-14 Measurements	7-10 Measurements	3-6 Measurements
2	.070	.080	.090	.140
3	.050	.060	.070	.090
4	.050	.060	.070	.080
5-6	.040	.050	.060	.070
7 or more	.030	.035	.040	.060

(2) For transmission paths carrying first routed traffic between an end office and customer's premises via an access tandem, the measured blocking thresholds are as follows:

(Continued)

ACCESS SERVICE

5. Switched Access Service (Cont'd)

5.5 Obligations of the Telephone Company (Cont'd)

5.5.6 Design Blocking Measurement (Cont'd)

(D) (Cont'd)

(2) (Cont'd)

Number of Transmission Paths Per Trunk Group	Measured Blocking Thresholds in the Time Consistent Busy Hour for the Number of Measurements Taken Between 8:00 a.m. and 11:00 p.m. Per Trunk Group			
	15-20 Measurements	11-14 Measurements	7-10 Measurements	3-6 Measurements
2	.045	.055	.060	.095
3	.035	.040	.045	.060
4	.035	.040	.045	.055
5-6	.025	.035	.040	.045
7 or more	.020	.025	.030	.040

5.6 Obligations of the Customer

5.6.1 Supervisory Signaling

The customer's facilities shall provide the necessary on-hook, off-hook, answer, and disconnect supervision.

(Continued)

ACCESS SERVICE

5. Switched Access Service (Cont'd)

5.6 Obligations of the Customer (Cont'd)

5.6.2 Trunk Group Measurement Reports

With the agreement of the customer, trunk group data in the form of usage in CCS, peg count, and overflow for its end of all access trunk groups, where technologically feasible, will be made available to the Company. This data will be used to monitor trunk group utilization and service performance and will be based on previously arrangement intervals and format.

5.7 Rate Regulations

This section contains the specific regulations governing the rates and charges that apply for Switched Access Service.

5.7.1 Application of Rates and Charges

There are two types of rates and charges that apply to Switched Access Service. These are usage rates and nonrecurring charges.

(A) Usage Rates

Usage rates are rates that apply only when a specific rate element is used. These are applied on a per access minute or per-call basis. Access minute charges are accumulated over a monthly period.

(Continued)

ACCESS SERVICE

5. Switched Access Service (Cont'd)

5.7 Rate Regulations (Cont'd)

5.7.1 Application of Rates and Charges (Cont'd)

(B) Nonrecurring Charges

Nonrecurring charges are one-time charges that apply for a specific work activity (i.e., installation or change to an existing service). The types of nonrecurring charges that apply for Switched Access Service are: installation of service and service rearrangements.

(1) Installation of Service

Nonrecurring charges apply to each Switched Access Service installed. For FGA and FGB, which are ordered on a per-line or trunk basis respectively, the charge is applied per line or trunk. For FGC and FGD, which are ordered on a busy hour minutes of capacity basis, the charge is applied on a per-trunk basis to the end office, but the charge applies only when the capacity ordered requires the installation of an additional trunk(s).

(2) Service Rearrangements

All changes to existing services other than changes involving administrative activities only will be treated as a discontinuance of the existing service and an installation of a new service. The nonrecurring charged described in (1), preceding, will apply for this work activity.

(Continued)

ACCESS SERVICE

5. Switched Access Service (Cont'd)

5.7 Rate Regulations (Cont'd)

5.7.1 Application of Rates and Charges (Cont'd)

(B) Nonrecurring Charges (Cont'd)

(2) Service Rearrangements (Cont'd)

Administrative changes will be made without charge(s) to the customer. Administrative changes are as follows:

- Change of customer name,
- Change of customer or customer's end user premises address when the change of address is not a result of a physical relocation of equipment,
- Change in billing date (name, address, contact name, or telephone number),
- Change of agency authorization,
- Change of customer circuit identification,
- Change of billing account number,
- Change of customer test line number,
- Change of customer or customer's end user contact name or telephone number, and
- Change of jurisdiction.

(Continued)

ACCESS SERVICE

5. Switched Access Service (Cont'd)

5.7 Rate Regulations (Cont'd)

5.7.1 Application of Rates and Charges (Cont'd)

(B) Nonrecurring Charges (Cont'd)

(3) Moves

(a) Moves Within the Same Building

When the move is to a new location within the same building, the charge for the move will be an amount equal to one half of the installation nonrecurring charge for the capacity affected. There will be no change in the minimum period requirements.

(b) Moves to a Different Building

Moves to a different building will be treated as a discontinuance and start of service and all associated nonrecurring charges will apply. New minimum period requirements will be established for the new service. The customer will also remain responsible for satisfying all outstanding minimum period charges for the discontinued service.

(Continued)

ACCESS SERVICE

5. Switched Access Service (Cont'd)

5.7 Rate Regulations (Cont'd)

5.7.2 Minimum Periods

Minimum periods for Switched Access Service are described in Section 2.4.2.

5.7.3 Minimum Monthly Charge

(A) Switched Access Service is subject to a minimum monthly charge. The minimum charge applies for the total capacity provided. The minimum monthly charge consists of the following elements:

(1) The minimum monthly charge for usage rate elements is the sum of the charges for the measured or assumed usage for the month.

(2) For monthly rated elements, the minimum monthly charge is the monthly rate.

5.7.4 Measuring Access Minutes

Customer traffic to end offices will be measured (i.e., recorded or assumed) by the Company at end office switches. Originating and terminating calls will be measured (i.e., recorded or assumed) by the Company to determine the basis for computing chargeable access minutes. For terminating calls over usage rated FGA and FGB, FGC to 800 and FGD, and for originating calls over usage rates MTS/WATS-type FGA and FGB and FGD, the measured minutes are the chargeable

(Continued)

ACCESS SERVICE

5. Switched Access Service (Cont'd)

5.7 Rate Regulations (Cont'd)

5.7.4 Measuring Access Minutes (Cont'd)

access minutes. For terminating calls over usage rated FGA and FGB, FGC to 800 and FGD, and for originating calls over usage rates MTS/WATS-type FGA and FGB and FGD, the measured minutes are the chargeable access minutes. For originating calls over usage rated FX/ONAL FGA and FGC, chargeable originating access minutes are derived from recorded minutes in the following manner:

Step 1: Obtain recorded originating minutes and messages (measured as set forth in (C), following) from the appropriate recording data.

Step 2: Obtain the total attempts by diving the originating measured messages by the completion ratio. Completion ratios are obtained separately for the major call categories such as DDD, operator, 800, 900, and directory assistance from a sample study which analyzes the ultimate completion status of the total attempts which receive acknowledgment from the customer. That is, measured messages divided by completion ratio equals total attempts.

(Continued)

ACCESS SERVICE

5. Switched Access Service (Cont'd)

5.7 Rate Regulations (Cont'd)

5.7.4 Measuring Access Minutes (Cont'd)

Step 3: Obtain the total non-conversation time additive (NCTA) by multiplying the total attempts (obtained by Step 2) by the NCTA per attempt ratio. The NCTA per attempt ratio is obtained from the sample study identified in Step 2 by measuring the non-conversation time associated with both completed and incomplete attempts. The total NCTA is the time on a completed attempt from customer acknowledgment of receipt of call to called party answer (set up and ringing) plus the time on an incomplete attempt from customer acknowledgment of the call until the access tandem or end office receives a disconnect signal (ring - no answer, busy, or network blockage). That is, total attempts times NCTA per attempt ratio equals total NCTA.

Step 4: Obtain total chargeable originating access minutes by adding the total NCTA (obtained in Step 3) to the recorded originating measured minutes (obtained in Step 1). That is, measured minutes plus NCTA equals chargeable originating access minutes.

Following is an example which illustrates how the chargeable originating access minutes are derived from the measured originating access minutes using this formula.

(Continued)

ACCESS SERVICE

5. Switched Access Service (Cont'd)

5.7 Rate Regulations (Cont'd)

5.7.4 Measuring Access Minutes (Cont'd)

Where:	Measured Minutes (M. Min)	= 7,000
	Measured Messages (M. Mes.)	= 1,000
	Completion Ratio (CR)	= .75
	NCTA per Attempt	= .4

(1) Total Attempts = $\frac{1{,}000 \text{(M. Mes.)}}{.75 \text{ (CR)}}$ = 1,333.33

(2) Total NCTA = .4 (NCTA per Attempt) x 1,333.33 = 533.33

(3) Total Chargeable Originating Access Minutes =
7,000 (M. Min.) + 533.33 (NCTA) = 7,533.33

When assumed minutes are used, the assumed minutes are the chargeable access minutes.

FGA access minutes or fractions thereof, the exact value of the fraction being a function of the switch technology where the measurement is made, are accumulated over the billing period for each line or hunt group, and are then rounded up to the nearest access minute for each line or hunt group. Usage rated FGB, FGC, and FGD access minutes or fractions thereof, the exact value of the fraction being a function of the switch technology where the measurement is made, are accumulated

(Continued)

ACCESS SERVICE

5. Switched Access Service (Cont'd)

5.7 Rate Regulations (Cont'd)

5.7.4 Measuring Access Minutes (Cont'd)

over the billing period for each end office, and are then rounded up to the nearest access minute or each end office.

Assumed minutes are used for FGA services which originate or terminate in end offices not equipped with measurement capabilities and are applied on a per-line basis.

Where measurement capability does not exist for FGA provided to an entry switch, the number of assumed access minutes per line, per jurisdiction, are as set forth, following.

Originating and Terminating	Originating Only	Terminating Only
4195	1510	2685

Where originating and terminating measurement capability does not exist for a FGA service arranged for two-way calling, the number of assumed access minutes as set forth under the "Originating and Terminating" total, preceding, will apply per line. Where measurement capability exists for either originating or terminating usage, but not both, on a line arranged for two-way calling, the number of access minutes per line will be the number of assumed access minutes as set forth under the "Originating and Terminating" total, preceding, or the measured usage, whichever is greater.

(Continued)

ACCESS SERVICE

5. Switched Access Service (Cont'd)

5.7 Rate Regulations (Cont'd)

5.7.4 Measuring Access Minutes (Cont'd)

Where a FGA service is arranged for either originating calling only or terminating calling only, the number of assumed access minutes as set forth under "Originating Only" or "Terminating Only", preceding, as appropriate will apply per line.

(A) Feature Group A Usage Measurement

For originating calls over FGA, usage measurement begins upon acknowledgement from the customer.

The measurement of originating call usage over FGA ends when the originating FGA entry switch receives an on-hook supervisory signal from either the originating end user's end office, indicating the originating end user has disconnected, or the customer's point of termination, whichever is recognized first by the entry switch.

For terminating calls over FGA, usage measurement begins when the terminating FGA entry switch receives an off-hook supervisory signal from the terminating end user's end office, indicating the terminating end user has answered. The measurement of terminating call usage over FGA ends when the terminating FGA entry switch receives an on-hook supervisory signal from either the terminating end user's end office, indicating the terminating end user has disconnected, or the customer's point of termination, whichever is recognized first by the entry switch.

(Continued)

ACCESS SERVICE

5. Switched Access Service (Cont'd)

5.7 Rate Regulations (Cont'd)

5.7.4 Measuring Access Minutes (Cont'd)

(B) Feature Group B Usage Measurement

For originating calls over FGB, usage measurement begins when the originating FGB entry switch receives answer supervision forwarded from the customer's point of termination, indicating the customer's equipment has answered.

The measurement of originating call usage over FGB ends when the originating FGB entry switch receives disconnect supervision from either the originating end user's end office, indicating the originating end user has disconnected, or the customer's point of termination, whichever is recognized first by the entry switch.

For terminating calls over FGB, usage measurement begins when the terminating FGB entry switch receives answer supervision from the terminating end user's end office, indicating the terminating end user has answered.

The measurement of terminating call usage over FGB ends when the terminating FGB entry switch receives disconnect supervision from either the terminating end user's end office, indicating the terminating end user has disconnected, or the customer's point of termination, whichever is recognized first by the entry switch.

(Continued)

ACCESS SERVICE

5. Switched Access Service (Cont'd)

5.7 Rate Regulations (Cont'd)

5.7.4 Measuring Access Minutes (Cont'd)

(C) Feature Group C Usage Measurement

For originating calls over FGC, usage measurement begins when the originating FGC entry switch receives answer supervision from the customer's point of termination, indicating the called party has answered.

The measurement of originating call usage over FGC ends when the originating FGC entry switch receives disconnect supervision from either the originating end user's end office, indicating the originating end user has disconnected, or the customer's point of termination, whichever is recognized first by the entry switch.

For terminating calls over FGC to services other than 800, 900, or Directory Assistance, terminating FGC usage is not directly measured at the terminating entry switch, but is imputed from originating usage, excluding usage from calls to 800, 900, or Directory Assistance Services.

For terminating calls over FGC to 800 Service, usage measurement begins when the terminating FGC entry switch receives answer supervision from the terminating end user's end office, indicating the terminating 800 service end user has answered.

(Continued)

ACCESS SERVICE

5. Switched Access Service (Cont'd)

5.7 Rate Regulations (Cont'd)

5.7.4 Measuring Access Minutes (Cont'd)

(C) Feature Group C Usage Measurement (Cont'd)

The measurement of terminating call usage over FGC to 800 Service ends when the terminating FGC entry switch receives on on-hook supervisory signal from the terminating end user's end office, indicating the terminating 800 service end user has disconnected, or from the customer's point of termination, whichever is recognized first by the entry switch.

(D) Feature Group D Usage Measurement

For originating calls over FGD, usage measurement begins when the originating FGD entry switch receives the first wink supervisory signal forwarded from the customer's point of termination.

The measurement of originating call usage over FGD ends when the originating FGD entry switch receives disconnect supervision from either the originating end user's end office, indicating the originating end user has disconnected, or the customer's point of termination, whichever is recognized first by the entry switch.

The terminating calls over FGD, the measurement of access minutes begins when the terminating FGD entry switch receives answer supervision from the terminating end user's end office, indicating the terminating end user has answered.

(Continued)

ACCESS SERVICE

5. Switched Access Service (Cont'd)

5.7 Rate Regulations (Cont'd)

5.7.4 Measuring Access Minutes (Cont'd)

(D) Feature Group D Usage Measurement (Cont'd)

The measurement of terminating call usage over FGD ends when the terminating FGD entry switch receives disconnect supervision from either the terminating end user's end office, indicating the terminating end user has disconnected, or the customer's point of termination, whichever is recognized first by the entry switch.

5.7.5 Off-Peak Periods

Off-Peak Periods	Discount
Weekdays 11:00 PM to *8:00 AM	40%
Sunday All day	40%
Saturday All day	40%

* to but not including

Discounts for off-peak rate periods given in the above table are expressed as a percent reduction of the peak period local transport and local switching rates in Section 10.

(Continued)

ACCESS SERVICE

5. Switched Access Service (Cont'd)

5.7 Rate Regulations (Cont'd)

In cases where a message begins in one rate period and ends in another, the initial period discount is the discount in effect at the time the connection is established. If the message continues into an additional period, the new rate and/or discount applies for the remainder of the message.

On Christmas Day (December 25), New Year's Day (January 1), Independence Day (July 4), Thanksgiving Day and Labor Day, and on resulting legal holidays when Christmas, New Year's or Independence Day legal holidays fall on dates other than December 25, January 1, or July 4 respectively, the holiday rate applicable is the off-peak rate.

6. Special Access Service

6.1 General

Special Access Service provides a transmission path to connect customer designated premises, either directly or through a Company Hub where bridging or multiplexing functions are performed. Special Access Service includes all exchange access not utilizing Company end office switches.

The connections provided by Special Access Service can be either analog or digital. Analog connections are differentiated by spectrum and bandwidth. Digital connections are differentiated by bit rate.

(Continued)

ACCESS SERVICE

6. Special Access Service (Cont'd)

6.1 General (Cont'd)

Certain Special Access Services listed in this section of the tariff may not be currently offered in all Company locations, but may be provided upon customer request, on an individual cases basis, if facilities can be made available with reasonable effort. The Company will work cooperatively with the customer to provide the service on a timely basis.

6.1.1 Circuit Types

There are six types of circuits used to provide Special Access Services in this Tariff. Each type has its own characteristics. All are subdivided by one or more of the following:

- Transmission specifications,
- Bandwidth,
- Speed (i.e., bit rate),
- Spectrum

Customers can order a basic circuit and select from a list of available transmission parameters and channel interfaces that they desire to meet specific communications requirements.

For purposes of ordering circuits, each has been identified as a type of Special Access Service. However, such identification is not intended to limit a customer's use of the circuit nor to imply that the circuit is limited to a particular use. For example, if a customer's equipment is capable of transmitting voice over a circuit that is identified as a Metallic Service in this tariff, there is no restriction against doing so.

(Continued)

ACCESS SERVICE

6. Special Access Service (Cont'd)

6.1 General (Cont'd)

6.1.1 Circuit Types (Cont'd)

Following is a brief description of each type of channel:

- Metallic - a circuit for the transmission of low speed varying signals at rates up to 30 baud.

- Voice Grade - a circuit for the transmission of analog signals within an approximate bandwidth of 300 to 3000 Hz.

- Program Audio - a circuit for the transmission of audio signals. The nominal frequency bandwidths are from 50 to 15000 Hz, from 200 to 3500 Hz, from 100 to 5000 Hz, or from 50 to 8000 Hz.

- Video - a circuit for the transmission of standard 525 line 60 field monochrome or National Television Systems Committee color video signal and one or two associated 5 or 15 kHz audio signals. The bandwidth is either 30 Hz to 4.5 MHz or 30 Hz to 6.6 MHz.

- High Capacity - a circuit for the transmission of isochronous serial digital data at rates of 1.544, 3.152, 6.312, 44.736, or 274.176 Mbps.

- Digital Data - a circuit for the transmission of digital data at bit rates of 2.4, 4.8, 9.6, 19.2, 56, and 64 kbps.

(Continued)

ACCESS SERVICE

6. Special Access Service (Cont'd)

6.1 General (Cont'd)

6.1.2 Rate Categories

There are three basic rate categories which apply to Special Access Service.

- Channel Terminations
- Channel Mileage
- Optional Features and Functions

(A) Channel Termination

The Channel Termination rate category provides for the communications path between a customer designated premises and the serving wire center of that premises. Included as part of the Channel Termination is a standard channel interface arrangement which defines the technical characteristics associated with the type of facilities to which the access service is to be connected at the Point of Termination (POT) and the type of signaling capability, if any. The signaling capability itself is provided as an optional feature as set forth in (C), following. One Channel Termination charge applies per customer designated premises at which the circuit is terminated. The charge will apply even if the customer designated premises and the service wire center are co-located in a Company building.

(Continued)

ACCESS SERVICE

6. Special Access Service (Cont'd)

6.1 General (Cont'd)

6.1.2 Rate Categories (Cont'd)

(B) Channel Mileage

The Channel Mileage rate category provides for the transmission facilities between the serving wire centers associated with two customer designated premises, between a serving wire center associated with a customer designated premises, and a Company hub or between two Company hubs. The Channel Mileage charge is composed of a monthly charge rate per mile.

(C) Optional Features and Functions

Optional Features and Functions rate category provides for optional features and functions which may be added to a basic circuit to improve its quality or utility to meet specific communications requirements. These are not necessarily identifiable with specific equipment, but rather represent the end result in terms of performance characteristics which may be obtained. These characteristics may be obtained by using various combinations of equipment. Although the equipment necessary to perform a specified function may be installed at various locations along the path of the service, they will be charged for as a single rate element.

(Continued)

ACCESS SERVICE

6. Special Access Service (Cont'd)

6.1 General (Cont'd)

6.1.2 Rate Categories (Cont'd)

(C) Optional Features and Functions (Cont'd)

Examples of Optional Features and Functions that are available include, but are not limited to, the following:

- Bridging
- Gain Conditioning
- Multiplexing
- Transfer Arrangements

A hub is a Company designated serving wire center at which bridging or multiplexing functions are performed. The bridging functions performed are to connect three or more customer designated premises in a multi-point arrangement. The multiplexing functions are to channelize analog or digital facilities to individual services requiring a lower capacity or bandwidth.

6.1.3 Service Configurations

There are two types of service configurations over which Special Access Services are provided: two-point service and multi-point service.

(A) Two-Point Service

A two-point service connects two customer designated premises, either on a directly connected basis or through a hub where multiplexing functions are performed.

(Continued)

ACCESS SERVICE

6. Special Access Service (Cont'd)

6.1 General (Cont'd)

6.1.3 Service Configurations (Cont'd)

(A) Two-Point Service (Cont'd)

Applicable rate elements are:

- Channel Termination
- Channel Mileage
- Optional Features and Functions

The following diagram depicts a two-point Voice Grade service connecting two customer designated premises located 15 miles apart. The service is provided with C-Type conditioning.

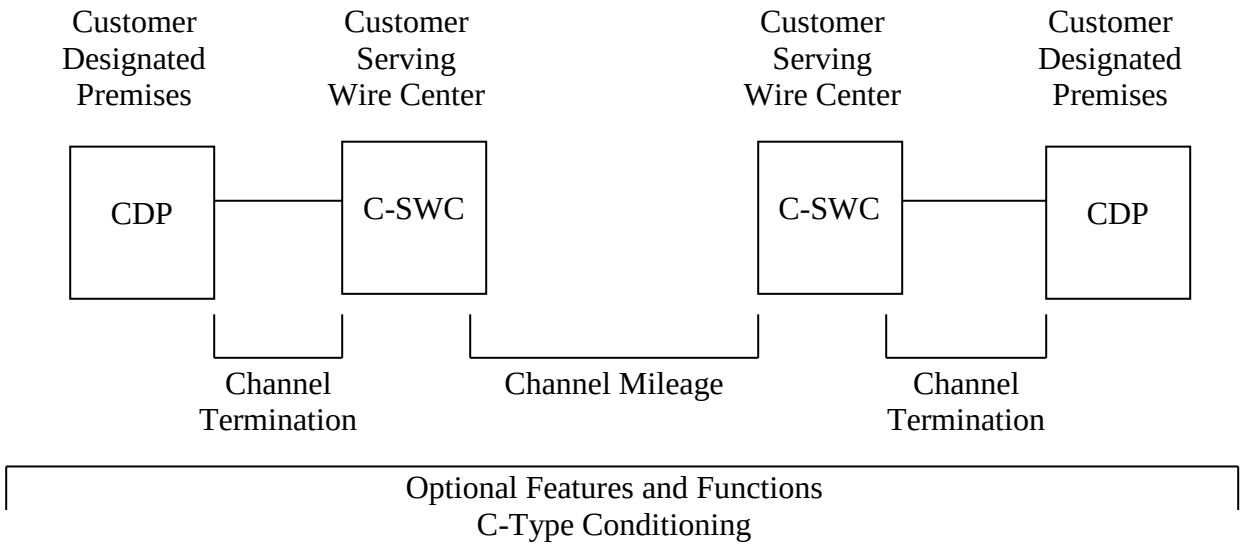

(Continued)

ACCESS SERVICE

6. Special Access Service (Cont'd)

6.1 General (Cont'd)

6.1.3 Service Configurations (Cont'd)

(A) Two-Point Service (Cont'd)

Applicable rate elements are:

- Channel Terminations (2 applicable)
- Channel Mileage (15 miles in this example)
- C-Type Conditioning Optional Feature

(B) Multi-Point Service

Multi-Point Service connects three or more customer premises through a Company Hub. Only certain types of Special Access Service are provided as Multi-Point Service.

The circuit between hubs (i.e., bridging locations) on a multi-point service is a mid-link. There is no limitation on the number of mid-links available with a Multi-Point Service. However, when more than three mid-links in tandem are provided, the quality of the overall service may be degraded.

If the Company determines that the requested characteristics for Multi-Point Service are not compatible, the customer will be advised and given the opportunity to change the order. When ordering, the customer will specify the desired bridging hub(s).

(Continued)

ACCESS SERVICE

6. Special Access Service (Cont'd)

6.1 General (Cont'd)

6.1.3 Service Configurations (Cont'd)

(B) Multi-Point Service (Cont'd)

Applicable Rate Elements are:

- Channel Termination (one per customer designated premises)
- Channel Mileage (as applicable between each serving wire center and the hub and between hubs)
- Bridging
- Optional Features (when applicable)

6.1.4 Design Layout Report

At the request of the customer, the Company will provide to the customer the make-up of the facilities and services provided under this tariff as Special Access Service to aid the customer in designing its overall service. This information will be provided in the form of a Design Layout Report. The Design Layout Report will be provided to the customer at no charge, and will be reissued or updated whenever these facilities are materially changed.

6.1.5 Acceptance Testing

At no additional charge, the Company will, at the customer's request, cooperatively test, at the time of installation, the following parameters:

(Continued)

ACCESS SERVICE

6. Special Access Service (Cont'd)

6.1 General (Cont'd)

6.1.5 Acceptance Testing (Cont'd)

(A) For Voice Grade analog services, acceptance test will include tests for loss, 3-tone slope, DC continuity, operational signaling, C-notched noise, and C-message noise when these parameters are applicable and specified in the order for service. Additionally, for Voice Grade services, a balance (improved loss) test will be made if the customer has ordered the improved loss optional feature.

(B) For other services (i.e., Metallic, Program Audio, and Video) and for digital services (i.e., Digital Data and High Capacity) acceptance tests will include tests for the parameters applicable to the service as specified by the customer in the order for service.

6.1.6 Ordering Options and Conditions

Special Access Service is ordered under the Access Order provision set forth in Section 4.

6.1.7 Service Descriptions

For the purposes of ordering, the Special Access Service categories are as follows:

Metallic
Voice Grade (VG)
Program Audio (AP)
Video (TV)
Digital Data (DA)
High Capacity (HC)

(Continued)

ACCESS SERVICE

6. Special Access Service (Cont'd)

6.1 General (Cont'd)

6.1.7 Service Descriptions (Cont'd)

Each service consists of a basic circuit to which a technical specifications package (customized or predefined), channel interface(s), and, when desired, optional features and functions are added to construct the service desired by the customer. Each of the components of the service are described in this section.

If the Company determined that the requested parameter specifications are not compatible, the customer will be advised and given the opportunity to change the order.

When a customized circuit is ordered, the customer will be notified whether Additional Engineering Charges apply. In such cases, the customer will be given an estimate of the hours to be billed before any further action is taken on the order.

The circuit description specifies the characteristics of the basic circuit and indicates whether the circuit is provided between customer designated premises or between a customer designated premises and a Telephone Company hub where bridging or multiplexing functions are performed.

(Continued)

ACCESS SERVICE

6. Special Access Service (Cont'd)

6.1 General (Cont'd)

6.1.7 Service Descriptions (Cont'd)

Information pertaining to the technical specifications packages indicates the transmission parameters that are available with each package. This information is displayed in a matrix with the transmission parameters listed down the left side and the packages listed across the top. Each package is identified by a code, i.e., VGC. The first two letters of the code indicate the category of Special Access Service to which the parameters are applicable. These two letter codes are shown above in parentheses following the category of Special Access Service. The letter "C" following the two letter code indicates the technical specifications package for a customized service. A numeric or alpha-numeric designation following the two letter code indicates the specific predefined package. For a customized service, the customer may select any parameters available with that category of service as long as the parameters are compatible. When appropriate, the Technical Reference which contains detailed specifications for the parameters is shown following the matrix.

Channel interfaces at each POT on a two-point service may be symmetrical or asymmetrical. On a multi-point service they may also be symmetrical or asymmetrical, but communications can only be provided between compatible channel interfaces. Only certain channel interfaces are compatible.

(Continued)

ACCESS SERVICE

6. Special Access Service (Cont'd)

6.1 General (Cont'd)

6.1.7 Service Descriptions (Cont'd)

Only certain channel interface combinations are available with the predefined technical specifications packages. These are delineated in the Technical References set forth at the end of this section. When a customized circuit is requested, all channel interface combinations available with the specified type of service are available with the customized circuit.

The optional features and functions available with each type of basic circuit are described in this section. The optional features and functions information also indicates with which technical specifications packages they are available. Such information is displayed in a matrix with the optional feature or function listed down the left side and the technical specifications package listed across the top.

All services installed will conform to the transmission specifications standards contained in this tariff or in the following Technical References for each category of service.

Metallic	PUB 62502
Voice Grade	PUB 62501 and associated Addendum
	PUB 41004, Table 4
Program Audio	PUB 62503 and associated Addendum
Video	PUB 62504 and associated Addendum
Digital Data	PUB 62507
	PUB 62310
High Capacity	PUB 64508
	PUB 62411

(Continued)

ACCESS SERVICE

6. Special Access Service (Cont'd)

6.1 General (Cont'd)

6.1.7 Service Descriptions (Cont'd)

(A) Metallic Service

(1) Basic Circuit Description

A metallic circuit is an unconditioned two-wire circuit capable of transmitting low speed varying signals at rates up to 30 baud. Metallic circuits are provided between customer designated premises or between a customer designated premises and a Company hub where bridging functions are performed. Interoffice metallic facilities will be limited in length to a total of five miles per circuit.

(2) Technical Specifications Packages

	Package MT -			
Parameter	C	1	2	3
DC Resistance Between Conductors	X	X	X	
Loop Resistance	X			X
Shunt Capacitance	X			X

The technical specifications are delineated in Technical Reference PUB 62502.

(Continued)

ACCESS SERVICE

6. Special Access Service (Cont'd)

6.1 General (Cont'd)

6.1.7 Service Descriptions (Cont'd)

(B) Voice Grade Service

(1) Basic Circuit Description

A Voice Grade Circuit is a circuit which provides voice frequency transmission capability in the nominal frequency range of 300 to 3000 Hz and may be terminated two-wire or four-wire. Voice Grade circuits are provided between customer designated premises or between a customer designated premises and a Telephone Company hub.

(2) Technical Specifications Packages

	Package VG -												
Parameter	C*	1	2	3	4	5	6	7	8	9	10	11	12
Attenuation Distortion	X	X	X	X	X	X	X	X	X	X	X	X	X
C-Message Noise	X	X	X	X	X	X	X	X	X	X	X	X	X
Echo Control X	X	X	X		X		X	X			X	X	
Envelope Delay Distortion	X						X	X	X	X	X	X	X
Frequency Shift	X						X	X	X	X	X	X	X
Impulse Noise	X					X	X	X	X	X	X	X	X

* The desired parameters are selected by the customer from the list of available parameters.

(Continued)

ACCESS SERVICE

6. Special Access Service (Cont'd)

6.1 General (Cont'd)

6.1.7 Service Descriptions (Cont'd)

(B) Voice Grade Service (Cont'd)

(2) Technical Specifications Packages (Cont'd)

	Package VG -												
Parameter	C*	1	2	3	4	5	6	7	8	9	10	11	12
Intermodulation Distortion	X						X	X	X	X	X	X	
Loss Deviation	X	X	X	X	X	X	X	X	X	X	X	X	X
Phase Hits, Gain, Hits, and Dropouts	X												
Phase Jitter	X						X	X	X	X	X	X	X
Signal-to-C Message Noise					X								
Signal-to-C Notch Noise	X					X	X	X	X	X	X	X	X

* The desired parameters are selected by the customer from the list of available parameters.

The technical specifications for these parameters (except for dropouts, gain hits, and phase hits) are delineated in Technical Reference PUB 62501 and associated Addendum. The technical specifications for dropouts, phase hits, Reference PUB 41004, Table 4.

(Continued)

ACCESS SERVICE

6. Special Access Service (Cont'd)

6.1 General (Cont'd)

6.1.7 Service Descriptions (Cont'd)

(B) Voice Grade Service (Cont'd)

(3) Channel Interfaces

The following channel interfaces for Voice Grade Service do not require signaling capability: AH, DA, DB, DD, DE, DS, NO, PR, and TF.

The following channel interfaces for Voice Grade Service require signaling capability: AB, AC, CT, DX, DY, EA, EB, EC, EX, GO, GS, LA, LB, LC, LO, LR, LS, RV, and SF.

(C) Program Audio Service

(1) Basic Circuit Description

A Program Audio circuit is a circuit measured in Hz for the transmission of a complex signal voltage. The actual bandwidth is a function of the channel interface selected by the customer. Only one-way transmission is provided. Program Audio circuits are provided between customer designated premises or between a customer designated premises and a Telephone Company Hub.

(Continued)

ACCESS SERVICE

6. Special Access Service (Cont'd)

6.1 General (Cont'd)

6.1.7 Service Descriptions (Cont'd)

(C) Program Audio Service (Cont'd)

(2) Technical Specification Packages

	Package AP -				
Parameter	C*	1	2	3	4
Actual Measured Loss	X	X	X	X	X
Amplitude Tracking	X				
Crosstalk	X	X	X	X	X
Distortion Tracking	X				
Gain/Frequency Distortion	X	X	X	X	X
Group Delay	X				
Noise	X	X	X	X	X
Phase Tracking	X				
Short-Term Gain Stability	X				
Short-Term Loss	X				
Total Distortion	X	X	X	X	X

* The desired parameters are selected by the customer from the list of available parameters

The technical specifications are delineated in Technical Reference PUB 62503 and associated Addendum.

(Continued)

ACCESS SERVICE

6. Special Access Service (Cont'd)

6.1 General (Cont'd)

6.1.7 Service Descriptions (Cont'd)

(C) Program Audio Service (Cont'd)

(3) Channel Interface

The following channel interfaces (CIs) define the bandwidths that are available for a Program Audio circuit:

CI	Bandwidth
PG-1	Nominal frequency from 50 to 15000 Hz
PG-3	Nominal frequency from 200 to 3500 Hz
PG-5	Nominal frequency from 100 to 5000 Hz
PG-8	Nominal frequency from 50 to 8000 Hz

(4) Optional Features and Functions

(a) Central Office Bridging Capability

Distribution Amplifier

(b) Gain Conditioning

With the addition of gain conditioning, the loss at initiation of service will be OdB ∀ 0.5 dB for AP1, AP2, AP3, and AP4.

(Continued)

ACCESS SERVICE

6. Special Access Service (Cont'd)

6.1 General (Cont'd)

6.1.7 Service Descriptions (Cont'd)

(C) Program Audio Service (Cont'd)

(4) Optional Features and Functions (Cont'd)

(c) Stereo

Provisions of a pair of gain/phase equalized channels for stereo applications. (Additional AP channel must be ordered separately.)

The following table shows the technical specifications packages with which the optional features and functions are available.

	Available with Technical Specifications Package AP-				
	C	1	2	3	4
Central Office					
Bridging Capability	X	X	X	X	X
Gain Conditioning	X	X	X	X	X
Stereo	X				X

(Continued)

ACCESS SERVICE

6. Special Access Service (Cont'd)

6.1 General (Cont'd)

6.1.7 Service Descriptions (Cont'd)

(D) Video Service

(1) Basic Circuit Description

A video circuit is a circuit with one-way transmission capability for a standard 525 line/60 field monochrome, or National Television Systems Committee color, video signal, and one or two associated 5 or 15 kHz audio signal(s). The bandwidth for a video circuit is either 30 Hz to 4.5 MHz or 30 Hz to 6.6 MHz. The associated audio signal(s) may be either duplexed or provided as one or two separate circuits. The provision and the bandwidth of the associated audio signal(s) is a function of the channel interface selected by the customer. Video circuits are provided between customer designated premises or between a customer designated premises and a Telephone Company Hub.

(Continued)

ACCESS SERVICE

6. Special Access Service (Cont'd)

6.1 General (Cont'd)

6.1.7 Service Descriptions (Cont'd)

(D) Video Service (Cont'd)

(2) Technical Specifications Packages

Parameter	Package TV - C*	1	2
Amplitude vs. Frequency Response	X		
Chrominance/Luminance Inequalities			
Gain	X	X	X
Delay	X	X	X
Chrominance/Luminance Intermodulation	X		
Chrominance Nonlinear Gain	X		
Chrominance Nonlinear Phase	X		
Crosstalk	X		X
Differential Gain	X	X	X
Differential Phase	X	X	X
Dynamic Gain (picture and sync signal)	X		
Field-Time Distortion	X	X	X
Gain/Frequency Distortion	X	X	X
Gain Stability	X	X	X
Insertion Gain	X	X	X
Line-Time Distortion	X	X	X
Long-Time Distortion	X	X	X
Luminance Nonlinearity	X		

* The desired parameters are selected by the customer from the list of available parameters.

(Continued)

ACCESS SERVICE

6. Special Access Service (Cont'd)

6.1 General (Cont'd)

6.1.7 Service Descriptions (Cont'd)

(D) Video Service (Cont'd)

(2) Technical Specifications Packages (Cont'd)

Parameter	Package TV - C*	1	2
Luminance Signal/CCIR Weighted Noise	X	X	X
Short-Time Distortion			
2 T Pulse	X	X	X
T - Bar Ringing	X	X	X
Signal/15 kHz Flat Weighted Noise	X	X	X
Signal/Low Frequency Noise	X		
Stereo Gain Difference	X	X	
Stereo Phase Difference	X	X	
Total Harmonic Distortion	X	X	X
Transient Sync Signal Non-Linearity	X		
Video/Audio Delay Difference	X		

The technical specifications are delineated in Technical Reference PUB 620504 and associated Addendum.

* The desired parameters are selected by the customer from the list of available parameters.

(Continued)

ACCESS SERVICE

6. Special Access Service (Cont'd)

6.1 General (Cont'd)

6.1.7 Service Descriptions (Cont'd)

(D) Video Service (Cont'd)

(3) Channel Interfaces

The following channel interfaces (CIs) define the bandwidth and the provision of the audio signal(s) associated with a video circuit:

CI	Audio Bandwidth	Provision
2TV6-1	15kHz	1 Channel, duplexed
2TV6-2	15kHz	2 Channels, duplexed
2TV7-1	15kHz	1 Channel, duplexed
2TV7-2	15kHz	2 Channels, duplexed
4TV6-5	5kHz	1 Channel, separate
4TV6-15	15kHz	1 Channel, separate
4TV7-5	5kHz	1 Channel, separate
4TV7-15	15kHz	1 Channel, separate
6TV6-5	5kHz	2 Channels, separate
6TV6-15	15kHz	2 Channels, separate
6TV7-5	5kHz	2 Channels, separate
6TV7-15	15kHz	2 Channels, separate

(Continued)

ACCESS SERVICE

6. Special Access Service (Cont'd)

6.1 General (Cont'd)

6.1.7 Service Descriptions (Cont'd)

(E) Digital Data Service

(1) Basic Circuit Description

A digital data circuit is a circuit for duplex four-wire transmission of synchronous serial data at the rate of 2.4, 4.8, 9.6, or 56 kbps. The actual bit rate is a function of the channel interface selected by the customer. The circuit provides a synchronous service with timing provided by the Company through the Company's facilities to the customer in the received bit stream. Digital data circuits are only available via Company designated hubs and are provided between customer designated premises or between a customer designated premises and a Company hub.

The customer may provide the channel service unit-type equipment or other network channel terminating equipment associated with the digital data circuit at the customer premises. The interim program for interconnection of such equipment is set forth in Technical References PUB AS No. 1.

(Continued)

ACCESS SERVICE

6. Special Access Service (Cont'd)

6.1 General (Cont'd)

6.1.7 Service Descriptions (Cont'd)

(E) Digital Data Service (Cont'd)

(2) Technical Specifications Packages

	Package DA			
Parameter	1	2	3	4
Error-Free Seconds	X	X	X	X

The Company will provide a circuit capable of meeting a monthly average performance equal to or greater than 99.875% error-free seconds while the circuit is in service, if it is measured through a CSU equivalent which is designed, manufactured, and maintained to conform with the specifications contained in Technical Reference PUB 62310.

Voltages which are compatible with Digit Data Service are delineated in Technical Reference PUB 62507.

(3) Channel Interfaces

The following channel interfaces (CIs) define the bit rates that are available for a digital data circuit.

CI	Bit Rate
DU-24	2.4 kbps
DU-48	4.8 kbps
DU-96	9.6 kbps
DU-56	56.0 kbps

(Continued)

ACCESS SERVICE

6. Special Access Service (Cont'd)

6.1 General (Cont'd)

6.1.7 Service Descriptions (Cont'd)

(E) Digital Data Service (Cont'd)

(4) Optional Features and Functions

(a) Central Office Bridging Capability

Digital data bridging, per port, is available on an individual case basis only.

(b) Loop Transfer Arrangement

An arrangement that affords the customer an additional measure of protection and/or flexibility in the use of their access circuit(s) on a 1xN basis. The arrangement can be utilized to transfer a leg of a Special Access Service to either a spare or working circuit that terminates in either the same or a different customer designated premises. This arrangement is only available at a Company designated hub. A key activated or dial-up control service is required to operate the transfer arrangement. A spare circuit, if required, is not included as a part of the option.

(Continued)

ACCESS SERVICE

6. Special Access Service (Cont'd)

6.1 General (Cont'd)

6.1.7 Service Descriptions (Cont'd)

(E) Digital Data Service (Cont'd)

(4) Optional Features and Functions (Cont'd)

(c) Public Packet Switching Network Interface Arrangement

An arrangement that provides the interface requirements that permit a Digital Data Service to interface with a Public Packet Switching Network packet switch located in a Company premises. The interface is compatible with X.25 and X.75 packet switching protocols as defined by the CCITT.

(F) High Capacity Service

(1) Basic Circuit Description

A high capacity circuit is a circuit for the transmission of nominal 64.0 kbps or 1.544, 3.152, 6.312, 44.736, or 274.176 Mbps isochronous serial data. The actual bit rate is a function of the channel interface selected by the customer. High capacity circuits are provided between a customer designated premises or between a customer designated premises and a Company hub.

(Continued)

ACCESS SERVICE

6. Special Access Service (Cont'd)

6.1 General (Cont'd)

6.1.7 Service Descriptions (Cont'd)

(F) High Capacity Service (Cont'd)

(1) Basic Circuit Description (Cont'd)

The customer may provide the network channel terminating equipment associated with the high capacity circuit at the customer's premises. The interim program for interconnection of such equipment is set forth in Technical Reference PUB AS No. 1.

(2) Technical Specifications Packages

	Package HC					
Parameter	0	1	1C	2	3	4
Error-Free Seconds		X				

A circuit with technical specifications package HC1 will be capable of an error-free second performance of 98.75% over a continuous 24 hour period as measured at the 1.544 Mbps rate through a CSU equivalent which is designed, manufactured, and maintained to conform with the specifications contained in Technical Reference PUB 62411.

(Continued)

ACCESS SERVICE

6. Special Access Service (Cont'd)

6.1 General (Cont'd)

6.1.7 Service Descriptions (Cont'd)

(F) High Capacity Service (Cont'd)

(3) Channel Interfaces

The following channel interfaces (CIs) define the bit rates that are available for a high capacity circuit:

CI	Bit Rate
DS-15*	1.544 Mbps (DS1)
DS-27	274.176 Mbps (DS4)
DS-31	3.152 Mbps (DSIC)
DS-44	44.736 Mbps (DS3)
DS-63	6.312 Mbps (DS2)

* A 64.0 Kbps channel is available as a channel(s) of a 1.544 Mbps channel to a Telephone Company hub.

Compatible channel interfaces are set forth in Section 9.

(Continued)

ACCESS SERVICE

6. Special Access Service (Cont'd)

6.1 General (Cont'd)

6.1.7 Service Descriptions (Cont'd)

(F) High Capacity Service (Cont'd)

(4) Optional Features and Functions

(a) Automatic Loop Transfer

The Automatic Loop Transfer provides protection on a 1xN basis against failure of the facilities between a customer designated premises and the wire center serving that premises. Protection is furnished through the use of a switching arrangement that automatically switches to a spare circuit line when a working line fails. The spare circuit is not included as a part of the option. These options require compatible equipment at both the serving wire center and the customer premises. The customer is responsible for providing the equipment at its premises.

(b) Central Office Multiplexing

(i) DS4 to DS1

An arrangement that converts a 274.176 Mbps circuit to 168 DS1 circuits using digital time division multiplexing.

(Continued)

ACCESS SERVICE

6. Special Access Service (Cont'd)

6.1 General (Cont'd)

6.1.7 Service Descriptions (Cont'd)

(F) High Capacity Service (Cont'd)

(4) Optional Features and Functions (Cont'd)

(b) Central Office Multiplexing (Cont'd)

(ii) DS3 to DS1

An arrangement that converts a 44.736 Mbps circuit to 28 DS1 circuits using digital time division multiplexing.

(iii) DS2 to DS1

An arrangement that converts a 6.312 Mbps circuit to four DS1 circuits using digital time division multiplexing.

(iv) DS1C to DS1

An arrangement that converts a 3.152 Mbps circuit to two DS1 circuits using digital time division multiplexing.

(Continued)

ACCESS SERVICE

6. Special Access Service (Cont'd)

6.1 General (Cont'd)

6.1.7 Service Descriptions (Cont'd)

(F) High Capacity Service (Cont'd)

(4) Optional Features and Functions (Cont'd)

(b) Central Office Multiplexing (Cont'd)

(v) DS1 to Voice

An arrangement that converts a 1.544 Mbps circuit to 24 circuits for use with Voice Grade Services. A circuit at this DS1 to the Hub can also be used for a Digital Data Service.

(vi) DS1 to DS0

An arrangement that converts a 1.544 Mbps circuit to 23 64.0 kbps circuits utilizing digital time division multiplexing.

(vii) DS0 to Subrate

An arrangement that converts a 64.0 kbps circuit to subspeeds of up to twenty 2.4 kbps, ten 4.8 kbps, or five 9.6 kbps circuits using digital time division multiplexing.

The following table shows the technical specifications packages with which the optional features and functions are available.

(Continued)

ACCESS SERVICE

6. Special Access Service (Cont'd)

6.1 General (Cont'd)

6.1.7 Service Descriptions (Cont'd)

(F) High Capacity Service (Cont'd)

(4) Optional Features and Functions (Cont'd)

(b) Central Office Multiplexing (Cont'd)

	Available with Technical Specifications Package HC-					
	0	1	1C	2	3	4
Automatic Loop Transfer		X				
Central Office Multiplexing:						
DS4 to DS1						X
DS3 to DS1				X		
DS2 to DS1			X			
DS1C to DS1			X			
DS1 to Voice	X					
DS1 to DS0	X					
DS0 to Subrate*	X					
Transfer Agreement	X					

* Available only on a circuit of a 1.544 Mbps facility to a Telephone Company hub.

(Continued)

ACCESS SERVICE

6. Special Access Service (Cont'd)

6.1 General (Cont'd)

6.1.7 Service Descriptions (Cont'd)

(F) High Capacity Service (Cont'd)

(4) Optional Features and Functions (Cont'd)

(c) Transfer Arrangement

An arrangement that affords the customer an additional measure of flexibility in the use of their access channel(s). The arrangement can be utilized to transfer a leg of a Special Access Service to either a spare or working channel that terminates in either the same or a different customer designated premises. A key activated or dial-up control service is required to operate the transfer arrangement. A spare channel, if required, is not included as part of the option.

6.2 Rate Regulations

This section contains the specific regulations governing the rates and charges that apply for Special Access Service.

(Continued)

ACCESS SERVICE

6. Special Access Service (Cont'd)

6.2 Rate Regulations (Cont'd)

6.2.1 Types of Rates and Charges

There are three types of rates and charges. These are monthly rates, daily rates, and nonrecurring charges. The rates and charges are described as follows:

(A) Monthly Rates

Monthly rates are flat recurring rates that apply each month or fraction thereof that a Special Access Service is provided. For billing purposes, each month is considered to have thirty (30) days.

(B) Daily Rates

Daily rates are flat recurring rates that apply to each 24 hour period or fraction thereof that a Program Audio Special Access Service is provided for part-time or occasional use. For the purposes of applying daily rates, the 24 hour period is not limited to a calendar day.

Part-time or occasional Program Audio Service provided within a consecutive thirty (30) day period will be charged the daily rate, not to exceed an amount equal to the monthly rate. For each subsequent day or part day, a charge equal to 1/30th of the monthly rate shall apply.

(Continued)

ACCESS SERVICE

6. Special Access Service (Cont'd)

6.2 Rate Regulations (Cont'd)

6.2.1 Types of Rates and Charges (Cont'd)

(C) Nonrecurring Charges

Nonrecurring charges are one-time charges that apply for specific work activity (i.e., installation or change to an existing service). The types of nonrecurring charges that apply for Special Access Service are: installation of service, installation of optional features and functions, moves and changes, and service rearrangements. Changes to existing services other than administrative changes described in Section 5.7.1 (B)(2) will be treated as a discontinuance of the existing service and an installation of a new service.

If an additional leg is added to an existing multi-point service, nonrecurring charges will only apply to the additional termination.

Nonrecurring charges apply for each Channel Termination installed and are set forth in Section 10.

6.2.2 Minimum Periods

The minimum service period for all services except part-time and occasional Video and Program Audio services is one month. The minimum service period for part-time Television and Program Audio Special Access Services is one (1) day, even though the service will be provided only for the duration of the event specified on the order (i.e., one-half hour, two hours, five hours, etc.).

(Continued)

ACCESS SERVICE

6. Special Access Service (Cont'd)

6.2 Rate Regulations (Cont'd)

6.2.3 Mileage Measurement

The mileage to be used to determine the monthly rate for the Circuit Mileage is calculated on the airline distance between the locations involved, i.e., the serving wire centers associated with two customer designated premises, a serving wire center associated with a customer designated premises, and a Company hub, or two Company hubs. The serving wire center associated with a customer designated premises is the serving wire center from which this customer designated premises would normally obtain dial tone.

To determine the rate to be billed, first compute the mileage using the V&H coordinates method, then apply the rate shown. When the calculation results in a fraction of a mile, always round up to the next whole mile before determining the mileage charges.

When hubs are involved, mileage is computed and rates applied separately for each of the Circuit Mileage, i.e., customer designated premises serving wire center to hub, hub to hub, and/or hub to customer designated premises serving wire center. However, when any service is routed through a hub for purposes other than customer specified bridging or multiplexing (i.e., the Company chooses to so route for test access purposes), rates will be applied only to the distance calculated between the serving wire centers associated with the customer designated premises.

(Continued)

ACCESS SERVICE

6. Special Access Service (Cont'd)

6.2 Rate Regulations (Cont'd)

6.2.3 Mileage Measurement (Cont'd)

When more than one Company is involved in the provision of Special Access Service, the mileage of the Circuit Mileage rate element for each Company is calculated.

6.2.4 Facility Hubs

(A) A customer has the option of ordering voice grade facilities, analog, or digital high capacity facilities to a facility hub for channelizing to individual services requiring lower capacity facilities (i.e., Voice, program Audio, etc.).

(B) Different locations may be designated as hubs for different facility capacities, i.e., multiplexing from digital to digital may occur at one location, which multiplexing from digital to analog may occur at a different location. When placing an Access Order the customer will specify the desired hub.

(C) Some of the types of multiplexing available include the following:

- from higher to lower bit rate
- from higher to lower bandwidth
- from digital to voice frequency circuits

(Continued)

ACCESS SERVICE

6. Special Access Service (Cont'd)

6.2 Rate Regulations (Cont'd)

6.2.4 Facility Hubs (Cont'd)

(D) End to end services may be provided on circuits of these facilities to a hub. The transmission performance for the end to end service provided between the customer designated premises will be that of the lower capacity or bit rate. For example, when a 1.544 Mbps facility is multiplexed to voice frequency circuits, the transmission performance of the channelized services will be Voice Grade, not High Capacity.

(E) The Company will commence billing the monthly rate for the facility to the hub on the date specified by the customer on the Access Order. Individual services utilizing these facilities may be installed coincident with the installation of the facility to the hub or may be ordered and/or installed at a later date, at the option of the customer. The customer will be billed for a voice grade or a high capacity analog or digital Circuit Termination, Circuit Mileage (when applicable), and the multiplexer at the time the facility is installed. Individual service rates (by service type) will apply for a Circuit Termination and additional Circuit Mileage (as required) for each channelized service. These will be billed to the customer as each individual service is installed.

(F) Cascading multiplexing occurs when a high capacity analog or digital circuit is de-multiplexed to provide circuits with a lesser capacity and one of the lesser capacity circuits is further de-multiplexed.

(Continued)

ACCESS SERVICE

6. Special Access Service (Cont'd)

6.2 Rate Regulations (Cont'd)

6.2.4 Facility Hubs (Cont'd)

(G) When cascading multiplexing is performed, whether in the same or a different hub, a charge for the additional multiplexing unit also applies. When cascading multiplexing is performed at different hubbing locations, Circuit Mileage charges also apply between the hubs.

(H) Although not requiring multiplexing, the Company will designate certain hubs for Video and Program Audio Services. Full-time service will be provided between a customer designated premises and a hub and billed accordingly at the monthly rates for a Circuit Termination, Optional Features and Functions, and Circuit Mileage, as applicable. The customer may order part-time and occasional Program Audio services as needed between that hub and a second customer designated premises. The rate elements required to provide the part-time or occasional service (i.e., Circuit Termination, Optional Features and Functions, and Circuit Mileage, as applicable) will be billed at daily rates for the duration of the service requested.

7. Additional Engineering, Additional Labor, and Miscellaneous Services

In this section, normally scheduled working hours are an employee's scheduled work period on any given business day, which totals eight (8) hours.

(Continued)

ACCESS SERVICE

7. Additional Engineering, Additional Labor, and Miscellaneous Services (Cont'd)

7.1 Additional Engineering

Additional Engineering, including engineering review, will be undertaken only after the Company has notified the customer that additional engineering charges apply and the customer agrees to such charges.

Additional Engineering will be provided by the Company at the request of the customer only when:

7.1.1 A customer requests additional technical information after the Company has already provided the technical information normally included on the Design Layout Report.

7.1.2 Additional Engineering time is incurred by the Company to engineer a customer's request for a customized service.

7.2 Additional Labor

Additional Labor is that labor requested by the customer on a given service and agreed to by the Company. The Company will notify the customer that Additional Labor charges will apply before any additional labor is undertaken. A call-out of a Company employee at a time not consecutive with the employee's scheduled work period is subject to a minimum charge of four hours.

7.2.1 Overtime Installation

Overtime installation is that Company installation effort outside of normally scheduled working hours.

7.2.2 Overtime Repair

Overtime repair is that Company effort performed outside of normally scheduled working hours.

(Continued)

ACCESS SERVICE

7. Additional Engineering, Additional Labor, and Miscellaneous Services (Cont'd)

7.2 Additional Labor (Cont'd)

7.2.3 Standby

Standby includes all time in excess of one-half (1/2) hour during which Company personnel standby to make installation acceptance tests or cooperative tests with a customer to verify facility repair on a given service.

7.2.4 Testing and Maintenance with Other Telephone Companies

Additional testing, maintenance, or repair of facilities which connect other telephone companies is that which is in addition to the normal effort required to test, maintain or repair facilities provided solely by the Company.

7.2.5 Testing Services

Testing Services other than those described in other parts of this tariff will be provided at the hourly rates described if requested by the customer. Testing will be provided subject to the availability of equipment and qualified personnel.

7.2.6 Other Labor

Other labor is that additional labor not included in 7.2.1 through 7.2.5, preceding, and labor incurred to accommodate a specific customer request that involves only labor which is not covered by any other section of this tariff.

(Continued)

ACCESS SERVICE

7. Additional Engineering, Additional Labor, and Miscellaneous Services (Cont'd)

7.3 Miscellaneous Services

7.3.1 Maintenance of Access Service

(A) When a customer reports a trouble to the Company for clearance and the trouble is not found in the Company's facilities, the customer shall be responsible for payment of a Maintenance of Service Charge set forth in Section 10 for the period of time from when Company personnel are dispatched, at the request of the customer, to the customer designated premises to when the work is completed.

(B) A call out of a company employee at a time not consecutive with the employee's scheduled work period is subject to a minimum charge of four hours.

7.3.2 Programming Service

(A) Programming Service charges set forth in Section 10 apply when a request by a customer for information concerning the access services provided to the customer results in the creation of new computer software or the modification of existing software in order to provide the requested information. The Company will notify the customer that additional programming charges will apply before any additional programming is undertaken.

(B) A call out of a Company employee at a time not consecutive with the employee's scheduled work period is subject to a minimum charge of four hours.

(Continued)

ACCESS SERVICE

7. Additional Engineering, Additional Labor, and Miscellaneous Services (Cont'd)

7.3 Miscellaneous Services (Cont'd)

7.3.3 Presubscription

(A) Description

Presubscription is a procedure whereby an end user or payphone service provider (PSP) may select and designate to the Company an Interexchange Carrier (IC) to access without dialing an access code. This procedure applies for both interLATA and intraLATA calls. This IC is referred to as the end user's or PSP's primary IC (PIC). An end user or PSP may select one PIC for both interLATA and intraLATA service, or they may choose to have two PICs, one for interLATA service and a different IC for intraLATA service.

The Presubscription procedure applies to Exchange Service lines and/or trunks, Switched Access line side connections, Centrex-type lines, and Public Access Line (PAL) Service.

Should a caller wish to use the services of an IC other than the PIC, it is necessary for the caller to dial the IC's access code(s) to reach that IC's service(s).

The terms and conditions for presubscription are following:

(Continued)

ACCESS SERVICE

7. Additional Engineering, Additional Labor, and Miscellaneous Services (Cont'd)

7.3 Miscellaneous Services (Cont'd)

7.3.3 Presubscription (Cont'd)

(B) Terms and Conditions

(1) Charge Application for Presubscription

(a) End users or PSPs placing orders for new service will be asked to select a PIC at the time they place an order with the Company for Exchange Service lines and/or trunks, Switched Access line side connection, Centrex-type service, or PAL Service. There will be no charge for this selection.

(b) Subsequent to the installation of Exchange Service, Switched Access line side connection, Centrex-type service, or PAL Service, for any change in selection, including a change from one access code to another access code for the same IC, a Presubscription charge as set forth in Section 10 applies.

(c) When end users or PSPs simultaneously choose or change an intrastate and interstate PIC, only the interstate Presubscription charge will apply.

(Continued)

ACCESS SERVICE

7. Additional Engineering, Additional Labor, and Miscellaneous Services (Cont'd)

7.3 Miscellaneous Services (Cont'd)

7.3.3 Presubscription (Cont'd)

(B) Terms and Conditions (Cont'd)

(1) Charge Application for Presubscription (Cont'd)

(d) The Presubscription charge for a PIC change is billed to the end user who is the customer to the Exchange Service, Switched Access line side connection, Centrex-type service, or to the PSP of PAL Service. However, an IC may, at its option, elect to pay the charge for any end user and/or PSP. When applicable, the Presubscription charge for a PIC change applies.

(2) Dispute Application for Presubscription

(a) If there is a conflict between an end user, a PSP, or their respective agent, on one hand, and the IC on the other hand, over the designation of the PIC, the Company will honor the designation selected by the end user, a PSP, or their respective agent, regardless of any contractual obligations the end user, PSP, or agent may have with one or more ICs.

(Continued)

ACCESS SERVICE

7. Additional Engineering, Additional Labor, and Miscellaneous Services (Cont'd)

7.3 Miscellaneous Services (Cont'd)

7.3.4 Presubscription (Cont'd)

(B) Terms and Conditions (Cont'd)

(2) Dispute Application for Presubscription (Cont'd)

(b) If there is a conflict between an end user and/or a PSP, on one hand, and their agent on the other hand, over the designation of the PIC, the Company will honor the designation selected by the end user and/or PSP regardless of any contractual obligations the end user and/or PSP may have with one or more ICs or agents.

(3) PIC Restoral

(a) PIC Restoral is the recovery of charges assessed by the Company for unauthorized PIC changes made to end user's Exchange Service, Switched Access line side connection, or Centrex-type service. The unauthorized carrier will be assessed the Presubscription charge incurred to restore the end user to their previous PIC. If the change was due to a Company error, the end user or PSP will be returned to its previous PIC free of charge.

(Continued)

ACCESS SERVICE

7. Additional Engineering, Additional Labor, and Miscellaneous Services (Cont'd)

7.3 Miscellaneous Services (Cont'd)

7.3.4 Presubscription (Cont'd)

(B) Terms and Conditions (Cont'd)

(3) PIC Restoral (Cont'd)

(b) When a business or residence end user denies authorizing a PIC change, the Company will restore the end user to its previous IC. All PIC change charges assessed by the Company to the end user as a result of the disputed PIC change will be credited to the end user's Exchange Service, Switched Access line side connection, or Centrex-type service.

(c) The Presubscription charge will be assessed per line or trunk associated with the Exchange Service, Switched Access line side connection, or Centrex-type service.

(4) Cancellation of Interexchange Participation for Presubscription

(a) If an IC elects to discontinue all of its Feature Group D Service in an end office, the IC is obligated to do the following:

(i) Notify the Company of the cancellation of their Feature Group D Service, and;

(Continued)

ACCESS SERVICE

7. Additional Engineering, Additional Labor, and Miscellaneous Services (Cont'd)

7.3 Miscellaneous Services (Cont'd)

7.3.4 Presubscription (Cont'd)

(B) Terms and Conditions (Cont'd)

(4) Cancellation of Interexchange Participation for Presubscription (Cont'd)

(a) If an IC elects to discontinue all of its Feature Group D Service in an end office, the IC is obligated to do the following: (Cont'd)

(ii) Contact all end users or PSPs that are presubscribed to the canceling IC as their PIC. Inform these end users or PSPs of the cancellation and request that the end users or PSPs contact the Company to select a new PIC.

(b) The Company will bill the canceling IC the Presubscription charge for each end user or PSP that this IC has currently redesignated to them. Such charge will not apply to the canceling IC where the canceling IC transfers or assigns its Feature Group D Service and the associated access code to another IC in such a manner that the Company does not change the end users' or PSPs' records or the end users' or PSPs' PIC designation, or if another IC elects to pay the Presubscription charge on behalf of the canceling IC.

(Continued)

ACCESS SERVICE

7. Additional Engineering, Additional Labor, and Miscellaneous Services (Cont'd)

7.3 Miscellaneous Services (Cont'd)

7.3.4 Presubscription (Cont'd)

(C) IC Initiated Conversions for Presubscription

When an IC requests that their end user or PSP be changed from one access code to another access code on a mass conversion basis (i.e., an IC using two or more PIC designations or an IC assuming ownership of another IC's end users, etc), the Presubscription charge will apply.

8. Special Construction

8.1 General

The rates and charges for special construction are determined on a time and material basis where facilities permit. All rates and charges quoted in other sections of this document provide for the furnishing of service when suitable facilities are available or where the construction of the necessary facilities does not involve unusual costs. The General Regulations apply to Special Construction.

8.2 Conditions Requiring Special Construction

8.2.1 Special construction is required when the facilities to provide services are not available and, at the request of the customer, the Company agrees to construct facilities to provide the services for the customer and there is no other requirement for the facilities so constructed, or

(Continued)

ACCESS SERVICE

8.2 Conditions Requiring Special Construction (Cont'd)

8.2.2 The facilities are of a type other than that which they would normally furnish in order to provide services for the customer, or

8.2.3 In order to comply with requirements specified by the customer, construction by the Company involves a routing of facilities other than that which they would normally utilize to provide services for the customer, or

8.2.4 At the request of the customer, the Company constructs a greater quantity of facilities than that which they would otherwise construct in order to fulfill the customer's initial requirements for service, or

8.2.5 The facilities to provide services are not available and, at the request of the customer, the Company expedites construction of the facilities at greater expense than would otherwise be incurred, or

8.2.6 The facilities to provide services are not available and, at the request of the customer, the Company constructs temporary facilities to provide services for the period during which the permanent facilities are under construction.

9. Interface Groups, Transmission Specifications, and Channel Interfaces

9.1 Local Transport Interface Groups

Ten Interface Groups are provided for terminating the Local Transport at the customer's premises. Each Interface Group provides a specified premises interface (i.e., two-wire, four-wire, DS1, etc).

(Continued)

ACCESS SERVICE

9. Interface Groups, Transmission Specifications, and Channel Interfaces (Cont'd)

9.1 Local Transport Interface Groups (Cont'd)

As a result of the customer's access order and the type of Company transport facilities serving the customer's premises, the need for signaling conversions or two-wire to four-wire conversions, or the need to terminate digital or high frequency facilities in channel bank equipment may require that Company equipment be placed at the customer's premises. For example, if a voice frequency interface is ordered by the customer and the Company facilities serving the customer's premises are digital, then Company channel bank equipment must be placed at the customer's premises in order to provide the voice frequency interface ordered by the customer.

Interface Group 1 is provided with Type C Transmission Specifications, and Interface Groups 2 through 10 are provided with Type A or B Transmission Specifications, depending on the Feature Group and whether the Access Service is routed directly or through an access tandem. All Interface Groups are provided with Data Transmission Parameters.

Only certain premises interfaces are available at the customer's premises. The premises interfaces associated with the Interface Groups may vary among Feature Groups. The various premises interfaces which are available with the Interface Groups, and the Feature Groups with which they may be used as follows:

9.1.1 Interface Group 1

(A) Interface Group 1, except as set forth in the following, provides two-wire voice frequency transmission at the point of termination at the customer's premises. The interface is capable of transmission of voice and associated telephone signals within the frequency bandwidth of approximately 300 to 3000 Hz.

(Continued)

ACCESS SERVICE

9. Interface Groups, Transmission Specifications, and Channel Interfaces (Cont'd)

9.1 Local Transport Interface Groups (Cont'd)

9.1.1 Interface Group 1 (Cont'd)

(B) Interface Group 1 is not provided in association with FGC and FGD when the first point of switching is an access tandem. In addition, Interface Group 1 is not provided in association with FGB, FGC, or FGD when the first point of switching provides only four-wire terminations.

(C) The transmission path between the point of termination at the customer's premises and the first point of switching may be comprised of any form or configuration of plant capable of and typically used in the telecommunications industry for the transmission of voice and associated telephone signals within the frequency bandwidth of 300 to 3000 Hz.

(D) The interface is provided with loop supervisory signaling. When the interface is associated with FGA, such signaling will be loop start or ground start signaling. When the interface is associated with FGB, FGC, or FGD, such signaling, except for two-way calling, which is E&M signaling, will be reverse battery signaling.

9.1.2 Interface Group 2

(A) Interface Group 2 provides four-wire voice frequency transmission at the point of termination at the customer's premises. The interface is capable of transmission of voice and associated telephone signals within the frequency bandwidth of approximately 300 to 3000 Hz.

(Continued)

ACCESS SERVICE

9. Interface Groups, Transmission Specifications, and Channel Interfaces (Cont'd)

9.1 Local Transport Interface Groups (Cont'd)

9.1.2 Interface Group 2 (Cont'd)

(B) The transmission path between the point of termination at the customer's premises and the first point of switching may be comprised of any form or configuration of plant capable of and typically used in the telecommunications industry for the transmission of voice and associated telephone signals within the frequency bandwidth of approximately 300 to 3000 Hz.

(C) The interface is provided with loop supervisory signaling. When the interface is associated with FGA, such signaling will be loop start or ground start signaling. When the interface is associated with FGB, FGC, or FGD, such signaling, except for two-way calling, which is E&M signaling, will be reverse battery signaling.

9.1.3 Interface Group 3

Interface Group 3 provides group level analog transmission at the point of termination at the customer's premises. The interface is capable of transmission electrical signals between the frequencies of 60 to 180 kHz, with the capability to channelize up to 12 voice frequency transmission paths. Certain frequencies within the bandwidth of the Interface Group are reserved for Company use, i.e., pilot and carrier group alarm tones. Before the first point of switching, the Company will provide multiplex equipment to derive 12 transmission paths of frequency bandwidth of approximately 300 to 3000 Hz. The interface is provided with individual transmission path SF supervisory signaling.

(Continued)

ACCESS SERVICE

9. Interface Groups, Transmission Specifications, and Channel Interfaces (Cont'd)

9.1 Local Transport Interface Groups (Cont'd)

9.1.4 Interface Group 4

Interface Group 4 provides supergroup level analog transmission at the point of termination at the customer's premises. The interface is capable of transmitting electrical signals between the frequencies of 312 to 552 kHz, with the capability to channelize up to 60 voice frequency transmission paths. Certain frequencies within the bandwidth of the Interface Group are reserved for Company use, i.e. pilot and carrier group alarm tones. Before the first point of switching, the Company will provide multiplex and channel bank equipment to derive 60 transmission paths of frequency bandwidth of approximately 300 to 3000 Hz. The interface is provided with individual transmission path SF supervisory signaling.

9.1.5 Interface Group 5

Interface Group 5 provides mastergroup level analog transmission at the point of termination at the customer's premises. The interface is capable of transmitting electrical signals between the frequencies of 564 to 3084 kHz, with the capability to channelize up to 600 voice frequency transmission paths. Certain frequencies within the bandwidth of the Interface Group are reserved for Company use, i.e. pilot and carrier group alarm tones. Before the first point of switching, the Company will provide multiplex and channel bank equipment to derive 600 transmission paths of frequency bandwidth of approximately 300 to 3000 Hz. The interface is provided with individual transmission path SF supervisory signaling.

(Continued)

ACCESS SERVICE

9. Interface Groups, Transmission Specifications, and Channel Interfaces (Cont'd)

9.1 Local Transport Interface Groups (Cont'd)

9.1.6 Interface Group 6

Interface Group 6 provides DS1 level digital transmission at the point of termination at the customer's premises. The interface is capable of transmitting electrical signals at a nominal 1.544 Mbps, with the capability to channelize up to 24 voice frequency transmission paths. Before the first point of switching, when analog switching utilizing analog terminations is provided, the Company will provide multiplex and channel bank equipment to derive 24 transmission paths of a frequency bandwidth of approximately 300 to 3000 Hz. When digital switching or analog switching with digital carrier terminations is provided, the Company will provide, at the first point of switching, a DS1 signal in D3/D4 format. The interface is provided with individual transmission path bit stream supervisory signaling.

9.1.7 Interface Group 7

Interface Group 7 provides DS1C level digital transmission at the point of termination at the customer's premises. The interface is capable of transmitting electrical signals at a nominal 3.152 Mbps, with the capability to channelize up to 48 voice frequency transmission paths. Before the first point of switching, when analog switching utilizing analog terminations is provided, the Company will provide multiplex and channel bank equipment to derive up to 48 voice frequency transmission paths of a frequency bandwidth of approximately 300 to 3000 Hz. When digital switching or analog switching with digital carrier terminations is provided, the Company will provide, at the first point of switching, DS1 signals in D3/D4 format. The interface is provided with individual transmission path bit stream supervisory signaling.

(Continued)

ACCESS SERVICE

9. Interface Groups, Transmission Specifications, and Channel Interfaces (Cont'd)

9.1 Local Transport Interface Groups (Cont'd)

9.1.8 Interface Group 8

Interface Group 8 provides DS2 level digital transmission at the point of termination at the customer's premises. The interface is capable of transmitting electrical signals at a nominal 6.312 Mbps, with the capability to channelize up to 96 transmission paths. Before the first point switching, when analog switching utilizing analog terminations is provided, the Company will provide multiplex and channel bank equipment in its office to derive up to 96 transmission paths of a frequency bandwidth of approximately 300 to 3000 Hz. When digital switching, or analog switching with digital carrier terminations is provided, the Company will provide, at the first point of switching, DS1 signals in D3/D4 format. The interface is provided with individual transmission path bit stream supervisory signaling.

9.1.9 Interface Group 9

Interface Group 9 provides DS3 level digital transmission at the point of termination at the customer's premises. The interface is capable of transmitting electrical signals at a nominal 44.736 Mbps, with the capability to channelize up to 672 voice frequency transmission paths. Before the first point of switching, when analog switching utilizing analog terminations is provided, the Company will provide multiplex and channel bank equipment to derive up to 672 transmission paths of a frequency bandwidth of approximately 300 to 3000 Hz. When digital switching, or analog switching with digital carrier terminations is provided, the Company will provide, at the first point of switching, DS1 signals in D3/D4 format. The interface is provided with individual transmission path bit stream supervisory signaling.

(Continued)

ACCESS SERVICE

9. Interface Groups, Transmission Specifications, and Channel Interfaces (Cont'd)

9.1 Local Transport Interface Groups (Cont'd)

9.1.10 Interface Group 10

Interface Group 10 provides DS4 level digital transmission at the point of termination at the customer's premises. The interface is capable of transmitting electrical signals at a nominal 274.176 Mbps, with the capability to channelize up to 4032 voice frequency transmission paths. Before the first point of switching, When analog switching utilizing analog terminations is provided, the Company will provide multiplex and channel bank equipment to derive up to 4032 transmission paths of a frequency bandwidth of approximately 300 to 3000 Hz. When digital switching or analog switching with digital carrier terminations is provided, the Company will provide, at the first point of switching, DS1 signals in D3/D4 format. The interface is provided with individual transmission path bit stream supervisory signaling.

9.1.11 Available Premises Interface Codes

Following is a matrix showing, for each Interface Group, which premises interface codes are available as a function of the Company switch supervisory signaling and Feature Group.

(Continued)

ACCESS SERVICE

9. Interface Groups, Transmission Specifications, and Channel Interfaces (Cont'd)

9.1 Local Transport Interface Groups (Cont'd)

9.1.11 Available Premises Interface Codes (Cont'd)

Interface Group	Telephone Company Switch Supervisory Signaling	Premises Interface Code	Feature Group A	B	C	D
1	LO	2LS2	X			
	LO	2LS3	X			
	GO	2GS2	X			
	GO	2GS3	X			
	LO, GO	2DX3	X			
	LO, GO	4EA3-E	X			
	LO, GO	4EA3-M	X			
	LO, GO	6EB3-E	X			
	LO, GO	6EB3-M	X			
	RV, EA, EB, EC	2DX3		X	X	X
	RV, EA, EB, EC	4EA3-E		X	X	X
	RV, EA, EB, EC	4EA3-M		X	X	X
	RV, EA, EB, EC	6EB3-E		X	X	X
	RV, EA, EB, EC	6EB3-M		X	X	X
	EA, EB, EC	6EC3			X	X
	RV	2RV3-0		X	X	X
	RV	2RV3-T		X	X	X

(Continued)

ACCESS SERVICE

9. Interface Groups, Transmission Specifications, and Channel Interfaces (Cont'd)

9.1 Local Transport Interface Groups (Cont'd)

9.1.11 Available Premises Interface Codes (Cont'd)

Interface Group	Telephone Company Switch Supervisory Signaling	Premises Interface Code	Feature Group A	B	C	D
2	LO, GO	4SF2	X			
	LO, GO	4SF3	X			
	LO	4LS2	X			
	LO	4LS3	X			
	LO	6LS2	X			
	GO	4GS2	X			
	GO	4GS3	X			
	GO	6GS2	X			
	LO, GO	4DX2	X			
	LO, GO	4DX3	X			
	LO, GO	6EA2-E	X			
	LO, GO	6EA2-M	X			
	LO, GO	8EB2-E	X			
	LO, GO	8EB2-M	X			
	LO, GO	6EX2-B	X			
	RV, EA, EB, EC	4SF2		X	X	X
	RV, EA, EB, EC	4SF3		X		
	RV, EA, EB, EC	4DX2		X	X	X

(Continued)

ACCESS SERVICE

9. Interface Groups, Transmission Specifications, and Channel Interfaces (Cont'd)

9.1 Local Transport Interface Groups (Cont'd)

9.1.11 Available Premises Interface Codes (Cont'd)

Interface Group	Telephone Company Switch Supervisory Signaling	Premises Interface Code	Feature Group A	B	C	D
2	RV, EA, EB, EC	4DX3		X	X	X
	RV, EA, EB, EC	6DX2			X	
	RV, EA, EB, EC	6EA2-E		X	X	X
	RV, EA, EB, EC	6EA2-M		X	X	X
	RV, EA, EB, EC	8EB2-E		X	X	X
	RV, EA, EB, EC	8EB2-M		X	X	X
	EA, EB, EC	8EC2-M			X	X
	RV	4RV2-0		X	X	X
	RV	4RV2-T		X	X	X
	RV	4RV3-O		X	X	
	RV	4RV3-T		X	X	
3	LO, GO	4AH5-B	X			
	RV, EA, EB, EC	4AH5-B		X	X	X
4	LO, GO	4AH6-C	X			
	RV, EA, EB, EC	4AH6-C		X	X	X
5	LO, GO	4AH6-D	X			
	RV, EA, EB, EC	4AH6-D		X	X	X

(Continued)

ACCESS SERVICE

9. Interface Groups, Transmission Specifications, and Channel Interfaces (Cont'd)

9.1 Local Transport Interface Groups (Cont'd)

9.1.11 Available Premises Interface Codes (Cont'd)

Interface Group	Telephone Company Switch Supervisory Signaling	Premises Interface Code	Feature Group A	B	C	D
6	LO, GO	4DS9-15	X			
	LO, GO	4DS9-15L	X			
	RV, EA, EB, EC	4DS9-15		X	X	X
	RV, EA, EB, EC	4DS9-15L		X	X	X
7	LO, GO	4DS9-31	X			
	RV, EA, EB, EC	4DS9-32		X	X	X
	LO, GO	4DS9-31L	X			
	RV, EA, EB, EC	4DS9-31L		X	X	X
8	LO, GO	4DS0-63	X			
	LO, GO	4DS0-63L	X			
	RV, EA, EB, EC	4DS0-63		X	X	X
	RV, EA, EB, EC	4DS0-63L		X	X	X
9	LO, GO	4DS6-44	X			
	LO, GO	4DS6-44L	X			
	RV, EA, EB, EC	4DS6-44		X	X	X
	RV, EA, EB, EC	4DS6-44L		X	X	X

(Continued)

ACCESS SERVICE

9. Interface Groups, Transmission Specifications, and Channel Interfaces (Cont'd)

9.1 Local Transport Interface Groups (Cont'd)

9.1.11 Available Premises Interface Codes (Cont'd)

Interface Group	Telephone Company Switch Supervisory Signaling	Premises Interface Code	Feature Group A	B	C	D
10	LO, GO	4DS6-27	X			
	LO, GO	4DS6-27L	X			
	RV, EA, EB, EC	4DS6-27		X	X	X
	RV, EA, EB, EC	4DS6-27L		X	X	X

9.1.12 Supervisory Signaling

Where the transmission parameters permit, and where signaling conversion is required by the customer to meet its signaling capability, the customer may order an optional supervisory signaling arrangement for each transmission path provided as follows:

(A) For Interface Groups 1 and 2

DX Supervisory Signaling,
E&M Type I Supervisory Signaling,
E&M Type II Supervisory Signaling, or
E&M Type III Supervisory Signaling.

(Continued)

ACCESS SERVICE

9. Interface Groups, Transmission Specifications, and Channel Interfaces (Cont'd)

9.1 Local Transport Interface Groups (Cont'd)

9.1.12 Supervisory Signaling (Cont'd)

(B) For Interface Group 2

SF Supervisory Signaling, or
Tandem Supervisory Signaling.

(C) For Interface Groups 6 through 10

These Interface Groups may, at the option of the customer, be provided with individual transmission path SF supervisory signaling where such signaling is available in Company central offices. Generally such signaling is available only where the entry switch provides an analog; i.e., nondigital, interface to the transport termination.

9.2 Transmission Specifications Switched Access Service

Each Switched Access Service transmission path is provided with standard transmission specifications. There are three different standard specifications (Types A, B, and C). The standard for a particular transmission path is dependent on the Feature Group, the Interface Group, and whether the service is directly routed or via an access tandem. Data Transmission parameters are also provided with each Switched Access Service transmission path. The Company will, upon notification by the customer that the data parameters are not being met, conduct tests independently or in cooperation with the customer, and take any necessary action to ensure that the data parameters are met.

(Continued)

ACCESS SERVICE

9. Interface Groups, Transmission Specifications, and Channel Interfaces (Cont'd)

9.2 Transmission Specifications Switched Access Service (Cont'd)

The Company will maintain existing transmission specifications on functioning service configurations installed prior to the effective date of this tariff except that service configurations having performance specifications exceeding the standards listed in this provision will be maintained at performance levels specified in this tariff.

9.2.1 Standard Transmission Specifications

Following are descriptions of the three Standard Transmission Specifications available with Switched Access Service Feature Groups. The specific applications in terms of the Feature Groups and Interface Groups with which the Feature Group Standard Transmission Specifications are provided as follows:

(A) Type A Transmission Specifications

Type A Transmission Specifications are provided with the following parameters:

(1) Loss Deviation

The maximum Loss Deviation of the 1004 Hz loss relative to the Expected Measured Loss (EML) is 2.0 dB.

(Continued)

ACCESS SERVICE

9. Interface Groups, Transmission Specifications, and Channel Interfaces (Cont'd)

9.2 Transmission Specifications Switched Access Service (Cont'd)

9.2.1 Standard Transmission Specifications (Cont'd)

(A) Type A Transmission Specifications (Cont'd)

(2) Attenuation Distortion

The maximum Attenuation Distortion in the 404 to 2804 Hz frequency band relative to the loss 1004 Hz is -1.0 dB to +3.0 dB.

(3) C-Message Noise

The maximum C-Message Noise for the transmission path at the route miles listed is less than or equal to:

Route Miles	C-Message Noise* Type B2	Type B1
less than 50	35 dBrnCO	32 dBrnCO
51 to 100	37 dBrnCO	33 dBrnCO
101 to 200	40 dBrnCO	35 dBrnCO
201 to 400	43 dBrnCO	37 dBrnCO
401 to 1000	45 dBrnCO	39 dBrnCO

* For Feature Group C and D only Type B2 will be provided. For Feature Groups A and B, Type B1 or B2 will be provided as set forth in Technical Reference PUB 62500.

(Continued)

ACCESS SERVICE

9. Interface Groups, Transmission Specifications, and Channel Interfaces (Cont'd)

9.2 Transmission Specifications Switched Access Service (Cont'd)

9.2.1 Standard Transmission Specifications (Cont'd)

(A) Type A Transmission Specifications (Cont'd)

(4) C-Notch Noise

The maximum C-Notch Noise, utilizing a -16 dBmO holding tone, is less than or equal to 45 dBrnCO.

(5) Echo Control

Echo Control, identified as Equal Level Echo Path Loss, and expressed as Echo Return Loss and Singing Return Loss, is dependent on the routing, i.e., whether the service is routed directly from the customer's point of termination (POT) to the end office or via an access tandem. It is equal to or greater than the following:

	Echo Return Loss	Singing Return Loss
POT to Access Tandem	21 dB	14 dB
POT to End Office		
- Direct	N/A	N/A
- Via Access Tandem	16 dB	11 dB

(Continued)

ACCESS SERVICE

9. Interface Groups, Transmission Specifications, and Channel Interfaces (Cont'd)

9.2 Transmission Specifications Switched Access Service (Cont'd)

9.2.1 Standard Transmission Specifications (Cont'd)

(A) Type A Transmission Specifications (Cont'd)

(6) Standard Return Loss

Standard Return Loss expressed as Echo Return Loss and Singing Return Loss on two-wire ports of a four-wire point of termination shall be equal to or greater than:

Echo Return Loss	Singing Return Loss
5 dB	2.5 dB

(B) Type B Transmission Specifications

Type B Transmission Specification is provided with the following parameters.

(1) Loss Deviation

The maximum Loss Deviation of the 1004 Hz loss relative to the Expected Measured Loss (EML) is ± 2.5 dB.

(Continued)

ACCESS SERVICE

9. Interface Groups, Transmission Specifications, and Channel Interfaces (Cont'd)

9.2 Transmission Specifications Switched Access Service (Cont'd)

9.2.1 Standard Transmission Specifications (Cont'd)

(B) Type B Transmission Specifications (Cont'd)

(2) Attenuation Distortion

The maximum Attenuation Distortion is the 404 to 2804 Hz frequency band relative to loss at 1004 Hz is -2.0 dB to +4.0 dB.

(3) C-Message Noise

The maximum C-Message Noise for the transmission path at the route miles listed is less than or equal to:

	C-Message Noise*	
Route Miles	Type C2	Type C1
less than 50	38 dBrnCO	32 dBrnCO
51 to 100	39 dBrnCO	33 dBrnCO
101 to 200	41 dBrnCO	35 dBrnCO
201 to 400	43 dBrnCO	37 dBrnCO
401 to 1000	45 dBrnCO	39 dBrnCO

* For Feature Groups C and D only Type C2 will be provided. For Feature Groups A and B, Type C1 or C2 will be provided as set forth in Technical Reference PUB 62500.

(Continued)

ACCESS SERVICE

9. Interface Groups, Transmission Specifications, and Channel Interfaces (Cont'd)

9.2 Transmission Specifications Switched Access Service (Cont'd)

9.2.1 Standard Transmission Specifications (Cont'd)

(B) Type B Transmission Specifications (Cont'd)

(4) C-Notch Noise

The maximum C-Notch Noise, utilizing a -16 dBmO holding tone is less than or equal to 47 dBrnCO.

(5) Echo Control

Echo Control, identified as Impedance Balance for FGA and FGB and Equal Level Echo Path Loss for FGC and FGD, and expressed as Echo Return Loss (ERL) and Singing Return Loss (SRL), is dependent on the routing; i.e., whether the service is routed directly from the customer's point of termination (POT) to the end office or via an access tandem. The ERL and SRL also differ by Feature Group, type of termination, and type of transmission path. They are greater than or equal to the following:

(Continued)

ACCESS SERVICE

9. Interface Groups, Transmission Specifications, and Channel Interfaces (Cont'd)

9.2 Transmission Specifications Switched Access Service (Cont'd)

9.2.1 Standard Transmission Specifications (Cont'd)

(B) Type B Transmission Specifications (Cont'd)

(5) Echo Control (Cont'd)

	Echo Return Loss	Singing Return Loss
POT to Access Tandem		
- Terminated in 4-Wire trunk	21 dB	14 dB
POT to End Office		
- Terminated in 2-Wire trunk	16 dB	11 dB
POT to End Office		
- Direct	16 dB	11 dB
- Via Access Tandem		
• For FGB access	8 dB	4 dB
• For FGC access (Effective 4-Wire transmission path at end office)	16 dB	11 dB
• For FGC access (Effective 2-Wire transmission path at end office)	13 dB	6 dB

(Continued)

ACCESS SERVICE

9. Interface Groups, Transmission Specifications, and Channel Interfaces (Cont'd)

9.2 Transmission Specifications Switched Access Service (Cont'd)

9.2.1 Standard Transmission Specifications (Cont'd)

(B) Type B Transmission Specifications (Cont'd)

(6) Standard Return Loss

Standard Return Loss, expressed as Echo Return Loss and Singing Return Loss, on two-wire ports of a four-wire point of termination shall be equal to or greater than:

Echo Return Loss	Singing Return Loss
5 dB	2.5 dB

(C) Type C Transmission Specifications

Type C Transmission Specifications are provided with the following parameters:

(1) Loss Deviation

The maximum Loss Deviation of the 1004 Hz loss relative to the Expected Measured Loss is 3.0 dB.

(Continued)

ACCESS SERVICE

9. Interface Groups, Transmission Specifications, and Channel Interfaces (Cont'd)

9.2 Transmission Specifications Switched Access Service (Cont'd)

9.2.1 Standard Transmission Specifications (Cont'd)

(C) Type C Transmission Specifications (Cont'd)

(2) Attenuation Distortion

The maximum Attenuation Distortion in the 404 to 2804 Hz frequency band relative to loss at 1004 Hz is -2.0 dB to +5.5 dB.

(3) C-Message Noise

The maximum C-Message Noise for the transmission path at the route miles listed is less than or equal to:

	C-Message Noise*	
Route Miles	Type C2	Type C1
less than 50	38 dBrnCO	32 dBrnCO
51 to 100	39 dBrnCO	33 dBrnCO
101 to 200	41 dBrnCO	35 dBrnCO
201 to 400	43 dBrnCO	37 dBrnCO
401 to 1000	45 dBrnCO	39 dBrnCO

* For Feature Group C and D only Type C2 will be provided. For Feature Groups A and B, Type C1 or C2 will be provided as set forth in Technical Reference PUB 62500.

(Continued)

ACCESS SERVICE

9. Interface Groups, Transmission Specifications, and Channel Interfaces (Cont'd)

9.2 Transmission Specifications Switched Access Service (Cont'd)

9.2.1 Standard Transmission Specifications (Cont'd)

(C) Type C Transmission Specifications (Cont'd)

(4) C-Notch Noise

The maximum C-Notch Noise, utilizing a -16 dBm0 holding tone is less than or equal to 47 dBrnCO.

(5) Echo Control

Echo Control, identified as Return Loss and expressed as Echo Return Loss and Singing Return Loss, is dependent on the routing, i.e., whether the service is routed directly from the customer's point of termination (POT) to the end office or via an access tandem. It is equal to or greater than the following:

	Echo Return Loss	Singing Return Loss
POT to Access Tandem	13 dB	6 dB
POT to End Office		
- Direct	13 dB	6 dB
- Via Access Tandem (for FGB only)	8 dB	4 dB

(Continued)

ACCESS SERVICE

9. Interface Groups, Transmission Specifications, and Channel Interfaces (Cont'd)

9.2 Transmission Specifications Switched Access Service (Cont'd)

9.2.2 Data Transmission Parameters

Two types of Data Transmission Parameters, i.e., Type DA and Type DB, are provided for the Feature Group arrangements. These are described as follows:

(A) Data Transmission Parameters Type DA

(1) Signal to C-Notched Noise Ratio

The Signal to C-Notched Noise Ratio is equal to or greater than 33 dB.

(2) Envelope Delay Distortion

The maximum Envelope Delay Distortion for the frequency bands and route miles specified is:

604 to 2804 Hz

less than 50 route miles	500 microseconds
equal to or greater than 50 route miles	900 microseconds

(Continued)

ACCESS SERVICE

9. Interface Groups, Transmission Specifications, and Channel Interfaces (Cont'd)

9.2 Transmission Specifications Switched Access Service (Cont'd)

9.2.2 Data Transmission Parameters (Cont'd)

(A) Data Transmission Parameters Type DA (Cont'd)

(2) Envelope Delay Distortion (Cont'd)

1004 to 2404 Hz

less than 50 route miles	200 microseconds
equal to or greater than 50 route miles	400 microseconds

(3) Impulse Noise Counts

The Impulse Noise Counts exceeding a 65 dBrnCO threshold in 15 minutes is no more than 15 counts.

(4) Intermodulation Distortion

The Second Order (R2) and Third Order (R3) Intermodulation Distortion products are equal to or greater than:

Second Order (R2)	33 dB
Third Order (R3)	37 dB

(Continued)

ACCESS SERVICE

9. Interface Groups, Transmission Specifications, and Channel Interfaces (Cont'd)

9.2 Transmission Specifications Switched Access Service (Cont'd)

9.2.2 Data Transmission Parameters (Cont'd)

(A) Data Transmission Parameters Type DA (Cont'd)

(5) Phase Jitter

The Phase Jitter over the 4-300 Hz frequency band is less than or equal to 5° peak-to-peak.

(6) Frequency Shift

The maximum Frequency Shift does not exceed -2 to +2 Hz.

(B) Data Transmission Parameters Type DB

(1) Signal to C-Notched Noise Ratio

The signal to C-Notched Noise Ratio is equal to or greater than 30 dB.

(2) Envelope Delay Distortion

The maximum Envelope Delay Distortion for the frequency bands and route miles specified is:

604 to 2804 Hz

less than 50 route miles	800 microseconds
equal to or greater than 50 route miles	1000 microseconds

(Continued)

ACCESS SERVICE

9. Interface Groups, Transmission Specifications, and Channel Interfaces (Cont'd)

9.2 Transmission Specifications Switched Access Service (Cont'd)

9.2.2 Data Transmission Parameters (Cont'd)

(B) Data Transmission Parameters Type DB (Cont'd)

(2) Envelope Delay Distortion (Cont'd)

1004 to 2404 Hz

less than 50 route miles	320 microseconds
equal to or greater than 50 route miles	500 microseconds

(3) Impulse Noise Counts

The Impulse Noise Counts exceeding a 67 dBrnCO threshold in 15 minutes is no more than 15 counts.

(4) Intermodulation Distortion

The Second Order (R2) and Third Order (R3) Intermodulation Distortion products are equal to or greater than:

Second Order (R2)	31 dB
Third Order (R3)	34 dB

(Continued)

ACCESS SERVICE

9. Interface Groups, Transmission Specifications, and Channel Interfaces (Cont'd)

9.2 Transmission Specifications Switched Access Service (Cont'd)

9.2.2 Data Transmission Parameters (Cont'd)

(B) Data Transmission Parameters Type DB (Cont'd)

(5) Phase Jitter

The Phase Jitter over the 4-300 Hz frequency band is less than or equal to 7° peak-to-peak.

(6) Frequency Shift

The maximum Frequency Shift does not exceed -2 to +2 Hz.

9.3 Special Access Channel Interface and Network Channel Codes

This section explains the Channel Interface codes and Network Channel codes that the customer must specify when ordering Special Access Service. Included is an example which explains the specific characteristics of the code, a glossary of Channel Interface codes, impedance levels, Network Channel codes, and compatible Channel Interfaces.

(Continued)

ACCESS SERVICE

9. Interface Groups, Transmission Specifications, and Channel Interfaces (Cont'd)

9.3 Special Access Channel Interface and Network Channel Codes (Cont'd)

Example: If the customer specifies a NT Network Channel Code and a 2DC8-3 Channel Interface at the customer's premises, the following is being requested:

NT	=	Metallic Channel with a Predefined Technical Specification Package (1)
2	=	Number of physical wires at customer premises
DC	=	Facility interface for direct current or voltage
8	=	Variable impedance level
3	=	Metallic facilities (DC continuity) for direct current/low frequency control signals or slow speed data (30 baud)

9.3.1 Glossary of Channel Interface Codes and Options

Code	Option	Definition
AB	-	accepts 20 Hz ringing signal at customer's point of termination
AC	-	accepts 20 Hz ringing signal at customer's end user's point of termination
CT	-	Centrex Tie Trunk Termination
DA	-	data stream in VF frequency band at customer's end user's point of termination
DB	-	data stream in VF frequency band at customer's point of termination
	- 10	VF for TG1 and TG2
	- 43	VF for 43 Telegraph Carrier type signals, TG1 and TG2

(Continued)

ACCESS SERVICE

9. Interface Groups, Transmission Specifications, and Channel Interfaces (Cont'd)

9.3 Special Access Channel Interface and Network Channel Codes (Cont'd)

9.3.1 Glossary of Channel Interface Codes and Options (Cont'd)

Code	Option	Definition
DC	-	direct current or voltage
	- 1	monitoring interface with services RC combination (McCulloh format)
	- 2	Telephone Company energized alarm channel
	- 3	Metallic facilities (DC continuity) for direct current/low frequency control signals or slow speed data (30 baud)
DD	-	DATAPHONE Select-A-Station (and TABS) interface at customer's point of termination
DE	-	DATAPHONE Select-A-Station (and TABS) interface at the customer's end user's point of termination
DS	-	digital hierarchy interface
	- 15	1.544 Mbps (DS1) format per PUB 62411 plus D4
	- 15E	8-bit PCM encoded in one 64 kbps of the DS1 signal
	- 15F	8-bit PCM encoded in two 64 kbps of the DS1 signal
	- 15G	8-bit PCM encoded in three 64 kbps of the DS1 signal
	- 15H	14/11-bit PCM encoded in six 64 kbps of the DS1 signal
	- 15J	1.544 Mbps format for PUB 62411
	- 15K	1.544 Mbps format for PUB 62411 plus extended framing format
	- 15L	1.544 Mbps (DS1) with SF signaling

(Continued)

ACCESS SERVICE

9. Interface Groups, Transmission Specifications, and Channel Interfaces (Cont'd)

9.3 Special Access Channel Interface and Network Channel Codes (Cont'd)

9.3.1 Glossary of Channel Interface Codes and Options (Cont'd)

Code		Option	Definition
	-	27	274.176 Mbps (DS4)
	-	27L	274.176 Mbps (DS4) with SF signaling
	-	31	3.152 Mbps (DS1C)
	-	31L	3.152 Mbps (DS1C) with SF signaling
	-	44	44.736 Mbps (DS3)
	-	44L	44.736 Mbps (DS3) with SF signaling
	-	63	6.312 Mbps (DS2)
	-	63L	6.312 Mbps (DS2) with SF signaling
DU	-		Digital access interface
	-	24	2.4 kbps
	-	48	4.8 kbps
	-	56	56.0 kbps
	-	96	9.6 kbps
	-	A	1.544 Mbps format for PUB 62411
	-	B	1.544 Mbps format per PUB 62411 plus D4
	-	C	1.544 Mbps format per PUB 62411 plus extended framing format
DX	-		duplex signaling interface at customer's point of termination
DY	-		duplex signaling interface at customer's end user's point of termination

(Continued)

ACCESS SERVICE

9. Interface Groups, Transmission Specifications, and Channel Interfaces (Cont'd)

9.3 Special Access Channel Interface and Network Channel Codes (Cont'd)

9.3.1 Glossary of Channel Interface Codes and Options (Cont'd)

Code		Option	Definition
EA	-	E	Type I E&M Lead Signaling. Customer at POT or customer's end user at POT originates on E lead.
EA	-	M	Type I E&M Lead Signaling. Customer at POT or customer's end user at POT originates on M Lead.
EB	-	E	Type II E&M Lead Signaling. Customer at POT or customer's end user at POT originates on E Lead.
EB	-	M	Type II E&M Lead Signaling. Customer at POT or customer's end user at POT originates on M Lead.
EC	-		Type III E&M Signaling at customer POT.
EX	-	A	tandem channel unit signaling for loop start or ground start and customer supplies open end (dial tone, etc.) functions.
EX	-	B	tandem channel unit signaling for loop start or ground start and customer supplies closed end (dial pulsing, etc.) functions.
GO	-		ground start loop signaling - open end function by customer or customer's end user.
GS	-		Ground start loop signaling - closed end function by customer or customer's end user.
IA	-		E.I.A. (25 pin RS-232).
LA	-		end user loop start loop signaling - Type A OPS registered port open end.
LB	-		end user loop start loop signaling - Type B OPS registered port open end.

(Continued)

ACCESS SERVICE

9. Interface Groups, Transmission Specifications, and Channel Interfaces (Cont'd)

9.3 Special Access Channel Interface and Network Channel Codes (Cont'd)

9.3.1 Glossary of Channel Interface Codes and Options (Cont'd)

Code	Option	Definition
LC	-	end user loop start loop signaling - Type C OPS registered port open end.
LO	-	loop start loop signaling - open end function by customer or customer's end user.
LR	-	20 Hz automatic ringdown interface at customer with Telephone Company provided PLAR.
LS	-	loop start loop signaling - closed end function by customer or customer's end user.
NO	-	no signaling interface, transmission only.
PG	-	program transmission - no dc signaling.
	- 1	nominal frequency from 50 to 15000 Hz.
	- 3	nominal frequency from 200 to 3500 Hz.
	- 5	nominal frequency from 100 to 5000 Hz.
	- 8	nominal frequency from 50 to 8000 Hz.
PR	-	protective relaying*.

* Available only for the transmission of audio tone protective relaying signals used in the protection of electric power systems during fault conditions.

(Continued)

ACCESS SERVICE

9. Interface Groups, Transmission Specifications, and Channel Interfaces (Cont'd)

9.3 Special Access Channel Interface and Network Channel Codes (Cont'd)

9.3.1 Glossary of Channel Interface Codes and Options (Cont'd)

Code		Option	Definition
RV	-	0	reverse battery signaling, one way operation, originated by customer.
	-	T	reverse battery signaling, one way operation, terminate function by customer or customer's end user.
SF	-		single frequency signaling with VF band at either customer POT or customer's end user POT.
TF	-		telephotograph interface.
TT	-		telegraph/teletypewriter interface at either customer POT or customer's end user POT.
	-	2	20.0 milliamperes.
	-	3	3.0 milliamperes.
	-	6	62.5 milliamperes.
TV	-		television interface.
	-	1	combined (diplexed) video and one audio signal.
	-	2	combined (diplexed) video and two audio signals.
	-	5	video plus one (or two) audio 5 kHz signal(s) or one (or two) two-wire.
	-	15	video plays one (or two) audio 15 kHz signal(s).

(Continued)

ACCESS SERVICE

9. Interface Groups, Transmission Specifications, and Channel Interfaces (Cont'd)

9.3 Special Access Channel Interface and Network Channel Codes (Cont'd)

9.3.2 Impedance

The nominal reference impedance with which the channel will be terminated for the purpose of evaluating transmission performances.

Value (ohms)	Code(s)
110	0
150	1
600	2
900	3+
135	5
75	6
124	7
Variable	8
100	9

\+ For those interface codes with a 4-wire transmission path at the customer designated POT, rather than a standard 900 ohm impedance the code (3) denotes a customer-provided transmission equipment termination. Such terminations were provided to customers in accordance with the F.C.C. Docket No. 20099 Settlement Agreement.

(Continued)

ACCESS SERVICE

9. Interface Groups, Transmission Specifications, and Channel Interfaces (Cont'd)

9.3 Special Access Channel Interface and Network Channel Codes (Cont'd)

9.3.3 Digital Hierarchy Channel Interface Codes (4DS)

Customers selecting the multiplexed four-wire DSX-1 or higher facility interface option at the customer designated premises will be requested to provide subsequent system and channel assignment data. The various digital bit rates in the digital hierarchy employ the channel interface code 4DS8, 4DS0, or 4DS6 plus the speed options indicated below:

Interface Code and Speed Option	Nominal Bit Rate (Mbps)	Digital Hierarchy Level
4DS8-15	1.544	DS1
4DS8-31	3.152	DS1C
4DS0-63	6.312	DS2
4DS6-44	44.736	DS3
4DS6-27	274.176	DS4

9.3.4 Service Designator/Network Channel Code Conversion Table

The purpose of this table is to show the relationship between the service designator codes (e.g., VGC, MT2, etc.) and the network channel codes that are used for:

(Continued)

ACCESS SERVICE

9. Interface Groups, Transmission Specifications, and Channel Interfaces (Cont'd)

9.3 Special Access Channel Interface and Network Channel Codes (Cont'd)

9.3.4 Service Designator/Network Channel Code Conversion Table (Cont'd)

Service Designator Code	Network Channel Code
MTC	MQ
MT1	NT
MT2	NU
MT3	NV
TGC	NQ
TG1	NW
TG2	NY
VGC	LQ
VGW	SE
VG1	LB
VG2	LC
VG3	LD
VG4	LE
VG5	LF
VG6	LG
VG7	LH
VG8	LJ
VG9	LK
VG10	LN
VG11	LP

(Continued)

ACCESS SERVICE

9. Interface Groups, Transmission Specifications, and Channel Interfaces (Cont'd)

9.3 Special Access Channel Interface and Network Channel Codes (Cont'd)

9.3.4 Service Designator/Network Channel Code Conversion Table (Cont'd)

Service Designator Code	Network Channel Code
VG12	LR
APC	PQ
AP1	PE
AP2	PF
AP3	PJ
AP4	PK
TVC	TQ
TV1	TV
TV2	TW
DA1	XA
DA2	XB
DA3	XG
DA4	XH
HCO	HS
HC1	HC
HC1C	HD
HC2	HE
HC3	HF
HC4	HG

(Continued)

ACCESS SERVICE

9. Interface Groups, Transmission Specifications, and Channel Interfaces (Cont'd)

9.3 Special Access Channel Interface and Network Channel Codes (Cont'd)

9.3.5 Compatible Channel Interfaces

The following tables show the channel interface codes (CIs) which are compatible:

(A) Metallic

Compatible CIs

2DC8-1	2DC8-2
2DC8-3	2DC8-3
4DS8-*	2DC8-1
4DS8-*	2DC8-2

* See 9.3.3, preceding, for explanation.

(B) Voice Grade

Compatible CIs		Compatible CIs		Compatible CIs	
2AB2	2AC2	2DB2	2DA2	2LR2	2LR2
2AB3	2AC2	2DB3	2DA2	2LR3	2LR2

(Continued)

ACCESS SERVICE

9. Interface Groups, Transmission Specifications, and Channel Interfaces (Cont'd)

9.3 Special Access Channel Interface and Network Channel Codes (Cont'd)

9.3.5 Compatible Channel Interfaces (Cont'd)

(B) Voice Grade (Cont'd)

Compatible CIs		Compatible CIs		Compatible CIs	
2CT3	2DY2	2DX3	2LA2	2LS2	2LA2
	4DS8*		2LB2		2LB2
	4DX2		2LC2		2LC2
	4DX3		2LO3		
	4DY2		2LS2	2LS3	2LA2
	4EA2-E		2LS3		2LB2
	4EA2-M				2LC2
	4SF2	2GO2	2GS2		
	4SF3		2GS3	2NO2	2DA2
	6DX2				2NO2
	6DY2	2GO3	2GS2		
	6DY3		2GS3	2NO3	2NO2
	6EA2-E				2PR2
	6EA2-M	2LO2	2LS2		
	6EB2-E		2LS3	2TF3	2TF2
	6EB2-M				
	6EB3-E	2LO3	2LS2		
	8EB2-E		2LS3		
	8EB2-M				

* See 9.3.3, preceding for explanation.

(Continued)

ACCESS SERVICE

9. Interface Groups, Transmission Specifications, and Channel Interfaces (Cont'd)

9.3 Special Access Channel Interface and Network Channel Codes (Cont'd)

9.3.5 Compatible Channel Interfaces (Cont'd)

(B) Voice Grade (Cont'd)

Compatible CIs

	8EC2
	9DY2
	9DY3
	9EA2
	9EA3
4AB2	2AC2
	4AB2
	4AC2
	4SF2
4AB3	2AC2
	4AC2
	4SF2
4AC2	2AC2
	4AC2

(Continued)

ACCESS SERVICE

9. Interface Groups, Transmission Specifications, and Channel Interfaces (Cont'd)

9.3 Special Access Channel Interface and Network Channel Codes (Cont'd)

9.3.5 Compatible Channel Interfaces (Cont'd)

(B) Voice Grade (Cont'd)

Compatible CIs		Compatible CIs		Compatible CIs	
		4DS8-*	2AC2	4DS8-*	4DG2
			2DA2		4LR2
			2DY2		4LS2
			2GO2		4NO2
4DA2	4DA2		2GO3		4PR2
			2GS2		4RV2-T
4DB2	2DA2		2GS3		4SF2
	2NO2		2LA2		4SF3
	2PR2		2LB2		4TF2
	4DA2		2LC2		6DA2
	4DB2		2LO2		6DY2
	4NO2		2LO3		6DY3
	4PR2		2LR2		6EA2-E
	6DA2		2LS2		6EA2-M
			2LS3		6EB2-E

* See 9.3.3, preceding for explanation.

(Continued)

ACCESS SERVICE

9. Interface Groups, Transmission Specifications, and Channel Interfaces (Cont'd)

9.3 Special Access Channel Interface and Network Channel Codes (Cont'd)

9.3.5 Compatible Channel Interfaces (Cont'd)

(B) Voice Grade (Cont'd)

Compatible CIs		Compatible CIs		Compatible CIs	
4DD3	2DE2		2NO2		6EB2-M
	4DE2		2PR2		6GS2
			2RV2-T		6LS2
			2TF2		8EB2-E
			4AC2		8EB2-M
			4DA2		9DY2
			4DE2		9DY3
			4DX2		9EA2
			4DX3		9EA3
			4DY2		
			4EA2-E		
			4EA2-M		
4DX2	2DY2	4DX2	8EB2-E	4DX3	6DY2
	2LA2		8EB2-M		6DY3
	2LB2		9DY2		6EA2-E
	2LC2		9DY3		6EA2-M
	2LO3		9EA2		6EB2-E
	2LS2		9EA3		6EB2-M
	2LS3				6LS2
	2RV2-T	4DX3	2DY2		8EB2-E
	4DX2		2LA2		8EB2-M

(Continued)

ACCESS SERVICE

9. Interface Groups, Transmission Specifications, and Channel Interfaces (Cont'd)

9.3 Special Access Channel Interface and Network Channel Codes (Cont'd)

9.3.5 Compatible Channel Interfaces (Cont'd)

(B) Voice Grade (Cont'd)

Compatible CIs		Compatible CIs		Compatible CIs	
	4DY2		2LB2		9DY2
	4EA2-E		2LC2		9DY3
	4EA2-M		2LO3		9EA2
	4LS2		2LS2		9EA3
	4RV2-T		2LS3		
	4SF2		2RV2-T	4DY2	2DY2
	4SF3		4DX2		4DY2
	6DY2		4DX3		
	6DY3		4DY2		
	6EA2-E		4EA2-E		
	6EA2-M		4EA2-M		
	6EB2-E		4LS2		
	6EB2-M		4RV2-T		
	6LS2		4SF2		
			4SF3		
4EA2-E	2DY2	4EA3-E	2DY2	4GO2	2GO2
	4DY2		4DY2		2GO3
	4EA2-E		4EA2-E		2GS2
	4EA2-M		4EA2-M		2GS3

(Continued)

ACCESS SERVICE

9. Interface Groups, Transmission Specifications, and Channel Interfaces (Cont'd)

9.3 Special Access Channel Interface and Network Channel Codes (Cont'd)

9.3.5 Compatible Channel Interfaces (Cont'd)

(B) Voice Grade (Cont'd)

Compatible CIs		Compatible CIs	Compatible CIs	
	4SF2	4SF2		4GS2
	6DY2	6DY2		4SF2
	6DY3	6DY3		6GS2
	6EB2-E	6EA2-E		
	6EB2-M	6EA2-M	4GO3	2GO2
	8EB2-E	6EB2-E		2GS2
	8EB2-M	6EB2-M		2GS3
	9DY2	8EB2-E		4GS2
	9DY3	9EB2-M		4SF2
		9DY2		6GS2
4EA2-M	2DY2	9DY3		
	4DY2	9EA2		
	4EA2-M	9EA3	4GS	2GS
	4SF2			2LS
				4GS
				4LS
	6DY2			
	6DY3			
	6EB2-E			
	6EB2-M			
	8EB2-E			

(Continued)

ACCESS SERVICE

9. Interface Groups, Transmission Specifications, and Channel Interfaces (Cont'd)

9.3 Special Access Channel Interface and Network Channel Codes (Cont'd)

9.3.5 Compatible Channel Interfaces (Cont'd)

(B) Voice Grade (Cont'd)

Compatible CIs		Compatible CIs		Compatible CIs	
	8EB2-M				
	9DY2				
	9DY3				
4LO2	2LS2	4LS3	2LA2	4SF2	2LO3
	2LS3		2LB2		2LR2
	4LS2		2LC2		2LS2
	4SF2		2LO2		2LS3
	6LS2		2LO3		2RV2-T
			4SF2		4AC2
4LO3	2LS2				4DY2
	2LS3	4NO2	2DA2		4LS2
	4LS2		2DE2		4RV2-T
	4SF2		2NO2		4SF2
	6LS2		4DA2		6DY2
			4DE2		6DY3
4LR2	2LR2		4NO2		6GS2
	4LR2		6DA2		9DY2
	4SF2				9DY3
		4RV2-0	2RV2-T		
4LR3	2LR2		4RV2-T	4SF3	2DY2
	4LR2		4SF2		2GO3
	4SF2				2GS2
		4SF2	2AC2		2GS3

(Continued)

ACCESS SERVICE

9. Interface Groups, Transmission Specifications, and Channel Interfaces (Cont'd)

9.3 Special Access Channel Interface and Network Channel Codes (Cont'd)

9.3.5 Compatible Channel Interfaces (Cont'd)

(B) Voice Grade (Cont'd)

Compatible CIs		Compatible CIs		Compatible CIs	
4LS2	2LA2		2DY2		2LA2
	2LB2		2GS2		2LB2
	2LC2		2GS3		2LC2
	2LO2		2LA2		2LO3
	2LO3		2LB2		2LR2
			2LC2		
4SF3	2LS2	6DA	4DA2	6DY3	2DY2
	2LS3		6DA2		4DY2
	2RV2-T				6DY2
	4DY2	6DX2	2DY2		6DY3
	4EA2-E		4DY2		
	4EA2-M		4EA2-E	6EA2-E	2AC2
	4GS2				
	4LR2		4EA2-M		2DY2
	4LS2		4SF2		2LA2
	4RV2-T		6DY2		2LB2
	4SF2		6DY3		2LC2
	4SF3		6EA2-E		2LO3
	6DY2		6EA2-M		2LS2
	6DY3		6EB2-E		2LS3
	6EB2-E		6EB2-M		2RV2-T

(Continued)

ACCESS SERVICE

9. Interface Groups, Transmission Specifications, and Channel Interfaces (Cont'd)

9.3 Special Access Channel Interface and Network Channel Codes (Cont'd)

9.3.5 Compatible Channel Interfaces (Cont'd)

(B) Voice Grade (Cont'd)

Compatible CIs		Compatible CIs		Compatible CIs	
	6EB2-M		8EB2-E		4AC2
	6GS2		8EB2-M		4DY2
	6LS2		9DY2		4EA2-E
	9DY2		9DY3		4EA2-M
	9DY3		9EA2		4LS2
	9EA2		9EA3		4RV2-T
	9EA3				4SF2
		6DY2	2DY2		4SF3
4TF2	2TF2		4DY2		6DY2
	4TF2		6DY2		6DY3
					6EA2-E
					6EA2-M
6EA2-E	6EB2-E	6EA2-M	6DY2	6EB3-E	2DY2
	6EB2-M		6DY3		4DY2
	6LS2		6EA2-M		4EA2-E
	8EB2-E		6EB2-E		4EA2-M
	8EB2-M		6EB2-M		4SF2
	9DY2		6LS2		6DY2
	9DY3		8EB2-E		6DY3
			8EB2-M		6EA2-E

(Continued)

ACCESS SERVICE

9. Interface Groups, Transmission Specifications, and Channel Interfaces (Cont'd)

9.3 Special Access Channel Interface and Network Channel Codes (Cont'd)

9.3.5 Compatible Channel Interfaces (Cont'd)

(B) Voice Grade (Cont'd)

Compatible CIs		Compatible CIs		Compatible CIs	
6EA2-M	2AC2		9DY2		6EA2-M
	2DY2		9DY3		8EB2-E
	2LA2				8EB2-M
	2LB2	6EB2-E	2DY2		9DY2
	2LC2		4DY2		9DY3
	2LO3		4SF2		9EA2
	2LS2		6DY2		9EA3
	2LS3		6DY3		
	2RV2-T		6EB2-E	6EX2-A	2GS2
	4AC2		6EB2-M		2GS3
	4DY2		9DY2		2LS2
	4EA2-E		9DY3		2LS3
	4EA2-M				4GS2
	4LS2	6EB2-M	2DY2		4LS2
	4RV2-T		4DY2		4SF2
	4SF2		4SF2		6GS2
	4SF3		6DY2		6LS2
			6DY3		
			6EB2-M		
			9DY2		
			9DY3		

(Continued)

ACCESS SERVICE

9. Interface Groups, Transmission Specifications, and Channel Interfaces (Cont'd)

9.3 Special Access Channel Interface and Network Channel Codes (Cont'd)

9.3.5 Compatible Channel Interfaces (Cont'd)

(B) Voice Grade (Cont'd)

Compatible CIs		Compatible CIs		Compatible CIs	
6EX2-B	2GO3	8EB2-E	2AC2	8EB2-M	2AC2
	2LA2		2DY2		2DY2
	2LB2		2LA2		2LA2
	2LC2		2LB2		2LB2
	2LO2		2LC2		2LC2
	2LO3		2LO3		2LO3
	2LR2		2LS2		2LS2
	4LR2		2LS3		2LS3
	4SF2		2RV2-T		2RV2-T
			4AC2		4AC2
6GO2	2GO2		4DY2		4DY2
	2GS2		4LS2		4LS2
	2GS3		4RV2-T		4RV2-T
	4GS2		4SF2		4SF2
	4SF2		4SF3		4SF3
	6GS2		6DY2		6DY2
			6DY3		6DY3
6LO2	2LS2		6EB2-E		6EB2-E
	2LS3		6EB2-M		6EB2-M
	4LS2		6LS2		6LS2
	4SF2		8EB2-E		8EB2-M
	6LS2		8EB2-M		9DY2
			9DY2		9DY3

(Continued)

ACCESS SERVICE

9. Interface Groups, Transmission Specifications, and Channel Interfaces (Cont'd)

9.3 Special Access Channel Interface and Network Channel Codes (Cont'd)

9.3.5 Compatible Channel Interfaces (Cont'd)

(B) Voice Grade (Cont'd)

Compatible CIs		Compatible CIs		Compatible CIs	
6LS2	2LA2		9DY3		
	2LB2				
	2LC2				
	2LO2				
	2LO3				
	4SF2				
8EC2	2DY2	9DY2	2DY2	9EA3	2DY2
	4DY2		4DY2		4DY2
	4EA2-E		6DY2		4EA2-E
	4EA2-M		6DY3		4EA2-M
	4SF2		9DY2		6DY2
	6DY2				6DY3
	6DY3	9DY3	2DY2		6EA2-E
	6EA2-E		4DY2		6EA2-M
	6EA2-M		6DY2		6EB2-E
	6EB2-E		6DY3		6EB2-M
	6EB2-M		9DY2		8EB2-E
	8EB2-E		9DY3		8EB2-M
	8EB2-M				9DY2
	9DY2	9EA2	2DY2		9DY3

(Continued)

ACCESS SERVICE

9. Interface Groups, Transmission Specifications, and Channel Interfaces (Cont'd)

9.3 Special Access Channel Interface and Network Channel Codes (Cont'd)

9.3.5 Compatible Channel Interfaces (Cont'd)

(B) Voice Grade (Cont'd)

Compatible CIs	Compatible CIs	Compatible CIs
9DY3	4DY2	9EA3
9EA2	4EA2-E	
9EA3	4EA2-M	
	6DY2	
	6DY3	
	6EA2-E	
	6EA2-M	
	6EB2-E	
	6EB2-M	
	8EB2-E	
	8EB2-M	
	9DY2	
	9DY3	
	9EA2	
	9EA3	

(Continued)

ACCESS SERVICE

9. Interface Groups, Transmission Specifications, and Channel Interfaces (Cont'd)

9.3 Special Access Channel Interface and Network Channel Codes (Cont'd)

9.3.5 Compatible Channel Interfaces (Cont'd)

(C) Program Audio

Compatible CIs		Compatible CIs	
2PG2-1	2PG1-1 2PG2-1	4DS8-15E	2PG1-3 2PG2-3
2PG2-3	2PG1-3 2PG2-3	4DS8-15F	2PG1-5 2PG2-5
2PG2-5	2PG1-5 2PG2-5	4DS8-15G	2PG1-8 2PG2-8
2PG2-8	2PG1-8 2PG2-8	4DA8-15H	2PG1-1 2PG2-1

(D) High Capacity

Compatible CIs		Compatible CIs	
4DS0-63	4DS0-63 4DU8-A, B, or C 6DU8-A, B, or C	4DS8-15J	4DU8-A 6DU8-A
		4DS8-15K	4DU8-B

(Continued)

ACCESS SERVICE

9. Interface Groups, Transmission Specifications, and Channel Interfaces (Cont'd)

9.3 Special Access Channel Interface and Network Channel Codes (Cont'd)

9.3.5 Compatible Channel Interfaces (Cont'd)

(D) High Capacity (Cont'd)

Compatible CIs		Compatible CIs	
4DS6-27	4DS6-27 4DU8-A, B, or C 6DU8-A, B, or C		4DU8-C 6DU8-B 6DU8-C
4DS6-44	4DS6-44 4DU8-A, B, or C 6DU8-A, B, or C	4DS8-31	4DS8-31 4DU8-A, B, or C 6DU8-A, B, or C
4DS8-15	4DS8-15* 4DU8-B 6DU8-8	4DU8-A, B, or C	4DU8-A, B, or C

* Available only as a cross connect of two individual channels of 1.544 Mbps facilities at a Telephone Company hub.

(Continued)

ACCESS SERVICE

9. Interface Groups, Transmission Specifications, and Channel Interfaces (Cont'd)

9.3 Special Access Channel Interface and Network Channel Codes (Cont'd)

9.3.5 Compatible Channel Interfaces (Cont'd)

(E) Video

Compatible CIs		Compatible CIs	
2TV6-1	4TV6-15 4TV7-15	4TV7-5	4TV6-5 4TV7-5
2TV6-2	6TV6-15 6TV7-15	4TV7-15	4TV6-15 4TV7-15
2TV7-1	4TV6-15 4TV7-15	6TV6-5	6TV6-5 6TV7-5
2TV7-2	6TV6-15 6TV7-15	6TV6-15	6TV6-15 6TV7-15
4TV6-5	4TV6-5 4TV7-5	6TV7-5	6TV6-5 6TV7-5
4TV6-15	4TV6-15 4TV7-15	6TV7-15	6TV6-15 6TV7-15

(Continued)

ACCESS SERVICE

9. Interface Groups, Transmission Specifications, and Channel Interfaces (Cont'd)

9.3 Special Access Channel Interface and Network Channel Codes (Cont'd)

9.3.5 Compatible Channel Interfaces (Cont'd)

(F) Digital Data

Compatible CIs	Compatible CIs	Compatible CIs	Compatible CIs	Compatible CIs	Compatible CIs
4DS8-15	4DS8-15*	4DU5-24	4DU5-24	6DU5-24	6DU5-24
	4DU5-24				
	4DU5-48	4DU5-48	4DU5-48	6DU5-48	6DU5-48
	4DU5-56				
	4DU5-96	4DU5-96	4DU5-96	6DU5-56	6DU5-56
	6DU5-24				
	6DU5-48	4DU8-56	4DU5-56	6DU5-96	6DU5-96
	6DU5-96				

* Available only as a cross connect of two digital channels at appropriate digital speeds at a Telephone Company hub.

10. Rates and Charges

10.1 General

The rates and charges for the services offered in this tariff are shown separately for each Issuing Carrier in this section. See the Table of Contents to locate the description of the services provided for these rate elements.

(Continued)

ACCESS SERVICE

10. Rates and Charges (Cont'd)

10.2 Albion Telephone Company

10.2.1 Switched Access Service

	Nonrecurring Charges	Monthly Rate	
			(T)
(A) Nonrecurring Charges			(T)
Per Line Connected	$290.13		
(B) Local Transport			(T)
(Per Access Minute)			(N)
Premium Access - Originating*		$0.016684	(T)
Premium Access – Terminating*:			(C)
(1) Tandem Switched Transport			
(a) Tandem Switched Facility, Per Terminating Access Minute, Per Mile		$0.000092	
(b) Tandem Switched Termination, Per Terminating Access Minute, Per Termination		$0.000479	(C)
			(M)
			(M)

* The Local Transport rate includes non-chargeable Interface Groups and Optional Features as set forth in Section 5.

(M) Rates 10.2.1(C) now shown on Original Sheet Number 285.2 in different rate structure and (D) now shown on Original Sheet Number 285.3. Original Sheet Number 285.1 is part of the (B) rate structure.

(Continued)

ACCESS SERVICE

10. Rates and Charges (Cont'd)

10.2 Albion Telephone Company (Cont'd)

10.2.1 Switched Access Service (Cont'd)

(B) Local Transport (Cont'd)

(2) Flat Rates – Switched Access Local Transport

(a) Direct Trunked Transport

	Monthly Rate	
(i) Direct Trunked Facility, Per Mile		
Voice Grade – Two & Four Wire	$ 5.80	(I)
High Capacity DS1	$ 27.22	
High Capacity DS3	$ 237.10	
(ii) Direct Trunked Termination, Per Termination		
Voice Grade – Two & Four Wire	$ 58.34	
High Capacity DS1	$ 141.22	
High Capacity DS3	$ 906.84	
(iii) Multiplexing, Per Arrangement		
DS3 to DS1	$ 827.39	
DS1 to Voice	$ 319.45	(I)

(Continued)

ACCESS SERVICE

10. Rates and Charges (Cont'd)

10.2 Albion Telephone Company (Cont'd)

10.2.1 Switched Access Service (Cont'd)

	Monthly Rate
(C) End Office Charges	
Local Switching Originating, Per Access Minute:	
Premium Access LS1 (FGA and FGB)	$0.016684
Premium Access LS2 (FGC and FGD)	$0.016684
Local Switching Terminating:	
(1) Premium Access: Per Terminating Access Minute:*	
- Effective7-1-2015	$ 0.016969 (C)(I)

* The composite Terminating Local Switching rate shown above include the Terminating Information Surcharge rate element.

(Continued)

ACCESS SERVICE

10. Rates and Charges (Cont'd)

10.2 Albion Telephone Company (Cont'd)

10.2.1 Switched Access Service (Cont'd)

	Monthly Rate	
(C) End Office Charges (Cont'd)		
(2) Information Surcharge Terminating, Combined in rates 10.2.1(C)(1)	$ 0.000000	(C) (C)
		(D) (D)
(D) 800 Data Base Access Service		
(1) Basic Rate, per query	$0.0035	
(2) Vertical Features Rate, per query (replaces basic rate)	$0.007165	
		(D) (D)

(Continued)

ACCESS SERVICE

10. Rates and Charges (Cont'd)

10.2 Albion Telephone Company (Cont'd)

10.2.1 Switched Access Service (Cont'd)

	Per Access Minute	
(E) Carrier Common Line Access Service		(T)
(1) Per Originating Minute	$0.00913	

(D)

10.2.2 Special Access Service

	Nonrecurring Charges	Monthly Rates*
(A) Channel Termination		
(1) Voice Grade Channel Per Termination		
(a) Two-Wire	$223.24	$58.88
(b) Four-Wire	223.24	91.04
(2) Metallic Channel Per Termination		
Two-Wire	223.24	58.88

* The Channel Termination rate includes non-chargeable Channel Interfaces as set forth in 6.1.7.

(D)

(Continued)

ACCESS SERVICE

10. Rates and Charges (Cont'd)

10.2 Albion Telephone Company (Cont'd)

10.2.2 Special Access Service (Cont'd)

	Nonrecurring Charges	Monthly Rates*	Daily Rates
(A) Channel Termination (Cont'd)			
(3) Program Audio Per Termination	$121.00	$33.77	$3.38
(a) Optional Features and Functions			
(i) Bridging, Distribution Amplifier Per Port	.00	21.71	2.18
(ii) Gain Conditioning Per Service	.00	11.07	0.11
(iii) Stereo Per Service	.00	11.07	0.11
(4) Video Service Per Termination	223.24	425.40	233.97

* The Channel Termination rate includes non-chargeable Channel Interfaces as set forth in 6.1.7.

(Continued)

ACCESS SERVICE

10. Rates and Charges (Cont'd)

10.2 Albion Telephone Company (Cont'd)

10.2.2 Special Access Service (Cont'd)

	Nonrecurring Charges	Monthly Rates*
(A) Channel Termination (Cont'd)		
(5) Digital Data Service Per Termination	$223.24	ICB
(a) Optional Features and Functions		
(i) Central Office Bridging Per Port	.00	$3.37
(ii) Loop Transfer Arrangement Per Four Port Arrangement	.00	6.75
(iii) Public Packet Switching Network Interface Arrangement	.00	18.21
(b) Channel Service Unit Per Termination	.00	18.60

* The Channel Termination rate includes non-chargeable Channel Interfaces as set forth in 6.1.7.

(Continued)

ACCESS SERVICE

10. Rates and Charges (Cont'd)

10.2 Albion Telephone Company (Cont'd)

10.2.2 Special Access Service (Cont'd)

	Nonrecurring Charges	Monthly Rates*
(A) Channel Termination (Cont'd)		
(6) High Capacity (DS1) Service Per Termination	$223.24	ICB
(a) Optional Features and Functions		
(i) Central Office Multiplexing, Per Arrangement	.00	$182.44
(ii) Automatic Loop Transfer, Per Arrangement	.00	440.13
(iii) Transfer Arrangement Per Four Port Arrangement, Including Control Channel Termination	.00	187.03

* The Channel Termination rate includes non-chargeable Channel Interfaces as set forth in 6.1.7.

(Continued)

ACCESS SERVICE

10. Rates and Charges (Cont'd)

10.2 Albion Telephone Company (Cont'd)

10.2.2 Special Access Service (Cont'd)

	Nonrecurring Charges	Monthly Rates**	Daily Rates
(A) Channel Termination (Cont'd)			
(7) High Capacity (DS3) Service Per Termination	$223.24	ICB	$.00
(B) Channel Mileage, Per Mile			
(1) Applies to Voice Grade, Metallic Channel, Program Audio, and Video Service	.00	$125.67	12.57*
(2) Digital Data Service***	.00	ICB	.00
(3) High Capacity Service			
(a) DS1	.00	ICB	.00
(b) DS3	.00	ICB	.00

* Applies only to Program Audio and Video Services.

** The Channel Termination rate includes non-chargeable Channel Interfaces as set forth in 6.1.7.

*** Digital Data is provided at the same rate for the following speeds: 2.4, 4.8, 9.6, 19.2, 56.0, and 64.0 Kbps. Speeds are limited by technological capacity of end office switches. All speeds are not available in all end offices.

(Continued)

ACCESS SERVICE

10. Rates and Charges (Cont'd)

10.2 Albion Telephone Company (Cont'd)

10.2.2 Special Access Service (Cont'd)

	Nonrecurring Charges	Monthly Rates
(C) Bridging		
Per Port	$.00	$6.50

10.2.3 Miscellaneous Services

	Basic Time, Scheduled Working Hours	Overtime, Outside Scheduled Working Hours
(A) Additional Engineering Periods		
Per Engineering, 1/2 hour or fraction thereof	$17.50	$24.50
(B) Additional Labor		
Per Technician, 1/2 hour or fraction thereof	17.50	24.50

(Continued)

ACCESS SERVICE

10. Rates and Charges (Cont'd)

10.2 Albion Telephone Company (Cont'd)

10.2.3 Miscellaneous Services (Cont'd)

	Basic Time, Scheduled Working Hours	Overtime, Outside Scheduled Working Hours	
(C) Maintenance of Service			
Per Technician, 1/2 hour or fraction thereof	$17.50	$24.50	(M)
			(M)
(D) Programming Service			(D)
Per Programmer, 1/2 hour or fraction thereof	30.00	45.00	(D)
			(M)
			(M)

(M) Material now shown on Sheet Number 293.

(Continued)

ACCESS SERVICE

10. Rates and Charges (Cont'd)

10.2 Albion Telephone Company (Cont'd)

10.2.3 Miscellaneous Services (Cont'd)

		Non-Recurring Charges	(T)
(E)	Intrastate IntraLATA Primary Interexchange Carrier (LPIC) Change Charge:		(C)(M)
	Per Occurrence, Per Line:		
	(1) Manually Processed	$5.50	
	(2) Electronically Processed	1.25	
	(3) PIC & LPIC for same carrier, same transaction:		
	(a) Manually Processed	2.75	
	(b) Electronically Processed	.62	(C)(M)
(F)	SS7 Signaling Conversion		(M)
	Per DS1	N/C	(M)
(G)	Access Order	See Section 4	
(H)	Service Date Change	See Section 4.5.1	

(M) Material previously shown on Sheet Number 292. Rate (E) was changed in compliance with Order No. 29806.

(Continued)

ACCESS SERVICE

10. Rates and Charges (Cont'd)

10.3 Cambridge Telephone Company

10.3.1 Switched Access Service

	Nonrecurring Charges	Monthly Rate	
(A) Nonrecurring Charges			
Per Line Connected	$290.13		
(B) Local Transport (Per Access Minute)			
Premium Access - Originating*		$0.02019	
Premium Access – Terminating*:			
(1) Tandem Switched Transport			
(a) Tandem Switched Facility, Per Terminating Access Minute, Per Mile		$0.00043	(I)
(b) Tandem Switched Termination, Per Terminating Access Minute, Per Termination		$0.002234	(I)

* The Local Transport rate includes non-chargeable Interface Groups and Optional Features as set forth in Section 5.

(Continued)

ACCESS SERVICE

10. Rates and Charges (Cont'd)

10.3 Cambridge Telephone Company (Cont'd)

10.3.1 Switched Access Service (Cont'd)

	Monthly Rate	
(B) Local Transport (Cont'd)		
(2) Flat Rates – Switched Access Local Transport		
(a) Direct Trunked Transport		
(i) Direct Trunked Facility, Per Mile		
Voice Grade – Two & Four Wire	$ 5.80	(I)
High Capacity DS1	$ 27.22	
High Capacity DS3	$ 237.10	
(ii) Direct Trunked Termination, Per Termination		
Voice Grade – Two & Four Wire	$ 58.34	
High Capacity DS1	$ 141.22	
High Capacity DS3	$ 906.84	
(iii) Multiplexing, Per Arrangement		
DS3 to DS1	$ 827.39	
DS1 to Voice	$ 319.45	(I)

(Continued)

ACCESS SERVICE

10. Rates and Charges (Cont'd)

10.3 Cambridge Telephone Company (Cont'd)

10.3.1 Switched Access Service (Cont'd)

	Monthly Rate	
(C) End Office Charges		
Local Switching Originating, Per Access Minute:		
Premium Access LS1 (FGA and FGB)	$0.02019	
Premium Access LS2 (FGC and FGD)	$0.02019	
Local Switching Terminating:		
(1) Premium Access: Per Terminating Access Minute:*		
- Effective 7-1-2015	$ 0.016969	(C)(R)

* The composite Terminating Local Switching rate shown above include the Terminating Information Surcharge rate element.

(Continued)

ACCESS SERVICE

10. Rates and Charges (Cont'd)

10.3 Cambridge Telephone Company (Cont'd)

10.3.1 Switched Access Service (Cont'd)

	Monthly Rate	
(C) End Office Charges (Cont'd)		
(2) Information Surcharge Terminating, Combined in rates 10.3.1(C)(1)	$ 0.000000	(C) (C)
		(D) (D)
(D) 800 Data Base Access Service		
(1) Basic Rate, per query	$0.0035	
(2) Vertical Features Rate, per query (replaces basic rate)	$0.007165	
		(D) (D)

(Continued)

ACCESS SERVICE

10. Rates and Charges (Cont'd)

10.3 Cambridge Telephone Company (Cont'd)

10.3.1 Switched Access Service (Cont'd)

	Per Access Minute	
(E) Carrier Common Line Access Service		(T) | (T)
(1) Per Originating Minute	$0.01000	
		(D)

10.3.2 Special Access Service

	Nonrecurring Charges	Monthly Rates*
(A) Channel Termination		
(1) Voice Grade Channel Per Termination		
(a) Two-Wire	$223.24	$36.47
(b) Four-Wire	223.24	55.19
(2) Metallic Channel Per Termination		
Two-Wire	223.24	36.47

* The Channel Termination rate includes non-chargeable Channel Interfaces as set forth in 6.1.7.

(Continued)

ACCESS SERVICE

10. Rates and Charges (Cont'd)

10.3 Cambridge Telephone Company (Cont'd)

10.3.2 Special Access Service (Cont'd)

	Nonrecurring Charges	Monthly Rates*	Daily Rates
(A) Channel Termination (Cont'd)			
(3) Program Audio Per Termination	$121.00	$33.77	$3.38
(a) Optional Features and Functions			
(i) Bridging, Distribution Amplifier Per Port	.00	21.71	2.18
(ii) Gain Conditioning Per Service	.00	11.07	0.11
(iii) Stereo Per Service	.00	11.07	0.11
(4) Video Service Per Termination	223.24	425.40	233.97

* The Channel Termination rate includes non-chargeable Channel Interfaces as set forth in 6.1.7.

(Continued)

ACCESS SERVICE

10. Rates and Charges (Cont'd)

10.3 Cambridge Telephone Company (Cont'd)

10.3.2 Special Access Service (Cont'd)

	Nonrecurring Charges	Monthly Rates*
(A) Channel Termination (Cont'd)		
(5) Digital Data Service Per Termination	$223.24	ICB
(a) Optional Features and Functions		
(i) Central Office Bridging Per Port	.00	$3.37
(ii) Loop Transfer Arrangement Per Four Port Arrangement	.00	6.75
(iii) Public Packet Switching Network Interface Arrangement	.00	18.21
(b) Channel Service Unit Per Termination	.00	18.60

* The Channel Termination rate includes non-chargeable Channel Interfaces as set forth in 6.1.7.

(Continued)

ACCESS SERVICE

10. Rates and Charges (Cont'd)

10.3 Cambridge Telephone Company (Cont'd)

10.3.2 Special Access Service (Cont'd)

	Nonrecurring Charges	Monthly Rates*
(A) Channel Termination (Cont'd)		
(6) High Capacity (DS1) Service Per Termination	$223.24	ICB
(a) Optional Features and Functions		
(i) Central Office Multiplexing, Per Arrangement	.00	$182.44
(ii) Automatic Loop Transfer, Per Arrangement	.00	440.13
(iii) Transfer Arrangement Per Four Port Arrangement, Including Control Channel Termination	.00	187.03

* The Channel Termination rate includes non-chargeable Channel Interfaces as set forth in 6.1.7.

(Continued)

ACCESS SERVICE

10. Rates and Charges (Cont'd)

10.3 Cambridge Telephone Company (Cont'd)

10.3.2 Special Access Service (Cont'd)

	Nonrecurring Charges	Monthly Rates**	Daily Rates
(A) Channel Termination (Cont'd)			
(7) High Capacity (DS3) Service Per Termination	$223.24	ICB	$.00
(B) Channel Mileage, Per Mile			
(1) Applies to Voice Grade, Metallic Channel, Program Audio, and Video Service	.00	$186.27	18.63*
(2) Digital Data Service***	.00	ICB	.00
(3) High Capacity Service			
(a) DS1	.00	ICB	.00
(b) DS3	.00	ICB	.00

* Applies only to Program Audio and Video Services.

** The Channel Termination rate includes non-chargeable Channel Interfaces as set forth in 6.1.7.

*** Digital Data is provided at the same rate for the following speeds: 2.4, 4.8, 9.6, 19.2, 56.0, and 64.0 Kbps. Speeds are limited by technological capacity of end office switches. All speeds are not available in all end offices.

(Continued)

ACCESS SERVICE

10. Rates and Charges (Cont'd)

10.3 Cambridge Telephone Company (Cont'd)

10.3.2 Special Access Service (Cont'd)

	Nonrecurring Charges	Monthly Rates
(C) Bridging		
Per Port	$.00	$6.50

10.3.3 Miscellaneous Services

	Basic Time, Scheduled Working Hours	Overtime, Outside Scheduled Working Hours
(A) Additional Engineering Periods		
Per Engineering, 1/2 hour or fraction thereof	$17.50	$24.50
(B) Additional Labor		
Per Technician, 1/2 hour or fraction thereof	17.50	24.50

(Continued)

ACCESS SERVICE

10. Rates and Charges (Cont'd)

10.3 Cambridge Telephone Company (Cont'd)

10.3.3 Miscellaneous Services (Cont'd)

	Basic Time, Scheduled Working Hours	Overtime, Outside Scheduled Working Hours	
(C) Maintenance of Service			
Per Technician, 1/2 hour or fraction thereof	$17.50	$24.50	(M)
(D) Programming Service			(M)
Per Programmer, 1/2 hour or fraction thereof	30.00	45.00	(D) (D)
			(M)
			(M)

(M) Material now shown on Sheet Number 302.

(Continued)

ACCESS SERVICE

10. Rates and Charges (Cont'd)

10.3 Cambridge Telephone Company (Cont'd)

10.3.3 Miscellaneous Services (Cont'd)

		Non-Recurring Charges
(E)	Intrastate IntraLATA Primary Interexchange Carrier (LPIC) Change Charge:	
	Per Occurrence, Per Line:	
	(1) Manually Processed	$5.50
	(2) Electronically Processed	1.25
	(3) PIC & LPIC for same carrier, same transaction:	
	(a) Manually Processed	2.75
	(b) Electronically Processed	.62
(F)	SS7 Signaling Conversion	
	Per DS1	N/C
(G)	Access Order Charge	See Section 4
(H)	Service Date Change Charge	See Section 4.5.1
(I)	Late Payment Charge	See Section 2.4.1(B)(4) (N)

(Continued)

ACCESS SERVICE

10. Rates and Charges (Cont'd)

10.4 Columbine Telephone Company, Inc., d.b.a. Silver Star Communications

10.4.1 Switched Access Service

	Nonrecurring Charges	Per Access Minute IntraLATA	Per Access Minute InterLATA	
(A) Nonrecurring Charges				
Per Line Connected	$290.13			
(B) Local Transport (Per Access Minute)				
Premium Access, Originating*		$0.0322	$0.0108	
Premium Access – Terminating*:				
(1) Tandem Switched Transport				
(a) Tandem Switched Facility, Per Terminating Access Minute, Per Mile		$0.00043	$0.00043	(I)

* The Local Transport rate includes non-chargeable Interface Groups and Optional Features as set forth in Section 5.

(Continued)

ACCESS SERVICE

10. Rates and Charges (Cont'd)

10.4 Columbine Telephone Company, Inc., d.b.a. Silver Star Communications (Cont'd)

10.4.1 Switched Access Service (Cont'd)

	Per Access Minute IntraLATA	Per Access Minute InterLATA	
(B) Local Transport (Cont'd) (Per Access Minute)			
Premium Access – Terminating*: (Cont'd)			
(1) Tandem Switched Transport (Cont'd)			
(b) Tandem Switched Termination, Per Terminating Access Minute, Per Termination	$0.002234	$0.002234	(I)
		Monthly Rate	
(2) Flat Rates – Switched Access Local Transport			
(a) Direct Trunked Transport			
(i) Direct Trunked Facility, Per Mile			
Voice Grade – Two & Four Wire		$ 4.34	
High Capacity DS1		$ 20.37	
High Capacity DS3		$ 177.43	(I)

* The Local Transport rate includes non-chargeable Interface Groups and Optional Features as set forth in Section 5.

(Continued)

ACCESS SERVICE

10. Rates and Charges (Cont'd)

10.4 Columbine Telephone Company, Inc., d.b.a. Silver Star Communications (Cont'd)

10.4.1 Switched Access Service (Cont'd)

(B) Local Transport (Cont'd)

(2) Flat Rates – Switched Access Local Transport (Cont'd)

(a) Direct Trunked Transport (Cont'd)

	Monthly Rate	
(ii) Direct Trunked Termination, Per Termination		
Voice Grade – Two & Four Wire	$ 43.66	(I)
High Capacity DS1	$ 105.69	
High Capacity DS3	$ 678.65	
(iii) Multiplexing, Per Arrangement		
DS3 to DS1	$ 619.19	
DS1 to Voice	$ 239.06	(I)

(Continued)

ACCESS SERVICE

10. Rates and Charges (Cont'd)

10.4 Columbine Telephone Company, Inc., d.b.a. Silver Star Communications (Cont'd)

10.4.1 Switched Access Service (Cont'd)

	Per Access Minute		
	IntraLATA	InterLATA	
(C) End Office Charges			
Local Switching Originating, Per Access Minute:			
(1) Premium Access LS1 (FGA and FGB)	$0.0175	$0.0175	
(2) Premium Access LS2 (FGC and FGD)	$0.0175	$0.0175	
Local Switching Terminating:			
(1) Premium Access: Per Terminating Access Minute:*			
- Effective 7-1-2015	$ 0.016969	$ 0.016969	(C)(R)

* The composite Terminating Local Switching rate shown above include the Terminating Information Surcharge rate element.

(Continued)

ACCESS SERVICE

10. Rates and Charges (Cont'd)

10.4 Columbine Telephone Company, Inc., d.b.a. Silver Star Communications (Cont'd)

10.4.1 Switched Access Service (Cont'd)

	Monthly Rate	
(C) End Office Charges (Cont'd)		
(2) Information Surcharge Terminating, Combined in rates 10.4.1(C)(1)	$ 0.000000	(C) (C) (D) (D)

(D) (D)

(Continued)

ACCESS SERVICE

10. Rates and Charges (Cont'd)

10.4 Columbine Telephone Company, Inc., d.b.a. Silver Star Communications (Cont'd) (T)

10.4.1 Switched Access Service (Cont'd)

	Per Access Minute
(D) 800 Data Base Access Service	
(1) Basic Rate, per query	N/A
(2) Vertical Features Rate, per query (replaces basic rate)	N/A
(E) Carrier Common Line Access Service	
(1) Per Originating Minute	$0.0100

(D)

10.4.2 Special Access Service

	Nonrecurring Charges	Monthly Rates*
(A) Channel Termination		
(1) Voice Grade Channel Per Termination		
(a) Two-Wire	$351.00	$34.50
(b) Four-Wire	353.00	46.00

(Continued)

ACCESS SERVICE

10. Rates and Charges (Cont'd)

10.4 Columbine Telephone Company, Inc., d.b.a. Silver Star Communications (Cont'd) (Z)

10.4.2 Special Access Service (Cont'd)

	Nonrecurring Charges	Monthly Rates*	
(A) Channel Termination (Cont'd)			
(2) Digital Data Service ** Per Termination	$370.50	$120.00	(D)
(3) High Capacity (DS1) Service Per Termination		ICB	
(4) High Capacity (DS3) Service Per Termination		ICB	
(5) Optional Features and Functions		ICB	

* The Channel Termination rate includes non-chargeable Channel Interfaces as set forth in 6.1.7.

** Digital Data speeds are limited by technological capacity of end Office switches. All speeds are not available in all end offices. (T)

(Continued)

ACCESS SERVICE

10. Rates and Charges (Cont'd)

10.4 Columbine Telephone Company, Inc., d.b.a. Silver Star Communications (Cont'd) (Z)

10.4.2 Special Access Service (Cont'd)

	Nonrecurring Charges	Monthly Rates Fixed*	Monthly Rates Per Mile
(B) Channel Mileage			
(1) Voice Grade,			
(a) Two-Wire	$.00	$19.00	$2.55
(b) Four-Wire	.00	19.00	2.55
(2) Digital Data Service **	.00	110.00	1.20
(3) High Capacity Service			
(a) DS1	.00	ICB	ICB
(b) DS3	.00	ICB	ICB
(4) Optional Features and Funcations	.00	ICB	ICB (N)
			Monthly Rates
(C) Bridging			
Per Port	N/A		N/A

* Per Termination.

** Digital Data speeds are limited by technological capacity of end office switches. All speeds are not available in all end offices. (T)

(Continued)

ACCESS SERVICE

10. Rates and Charges (Cont'd)

10.4 Columbine Telephone Company, Inc., d.b.a. Silver Star Communications (Cont'd) (Z)

10.4.3 Miscellaneous Services

		Basic Time, Scheduled Working Hours	Overtime, Outside Scheduled Working Hours
(A)	Additional Engineering Periods		
	Per Engineering, 1/2 hour or fraction thereof	$20.00	$30.00
(B)	Additional Labor		
	Per Technician, 1/2 hour or fraction thereof	20.00	30.00
(C)	Maintenance of Service		
	Per Technician, 1/2 hour or fraction thereof	20.00	30.00
(D)	Programming Service		
	Per Programmer, 1/2 hour or fraction thereof	20.00	30.00

(Continued)

ACCESS SERVICE

10. Rates and Charges (Cont'd)

10.4 Columbine Telephone Company, Inc., d.b.a. Silver Star Communications (Cont'd) (Z)

10.4.3 Miscellaneous Services (Cont'd)

		Non-Recurring Charges	(T)
(E)	Intrastate IntraLATA Primary Interexchange Carrier (LPIC) Change Charge:		(C)
	Per Occurrence, Per Line:		
	(1) Manually Processed	$5.50	
	(2) Electronically Processed	1.25	
	(3) PIC & LPIC for same carrier, same transaction:		
	(a) Manually Processed	2.75	
	(b) Electronically Processed	.62	(C)
(F)	SS7 Signaling Conversion Per DS1	N/A	
(G)	Access Order Charge	See Section 4	
(H)	Service Date Change Charge	See Section 4.5.1	

Rate (E) was changed in compliance with Order No. 29806.

(Continued)

ACCESS SERVICE

10. Rates and Charges (Cont'd)

10.5 Custer Telephone Cooperative, Inc.

10.5.1 Switched Access Service

	Nonrecurring Charges	Monthly Rate	
(A) Nonrecurring Charges			
Per Line Connected	$290.13		
(B) Local Transport (Per Access Minute)			
Premium Access - Originating*		$0.0269	
Premium Access – Terminating*:			
(1) Tandem Switched Transport			
(a) Tandem Switched Facility, Per Terminating Access Minute, Per Mile		$0.000430	(I)
(b) Tandem Switched Termination, Per Terminating Access Minute, Per Termination		$0.002234	(I)

* The Local Transport rate includes non-chargeable Interface Groups and Optional Features as set forth in Section 5.

(Continued)

ACCESS SERVICE

10. Rates and Charges (Cont'd)

10.5 Custer Telephone Cooperative, Inc. (Cont'd)

10.5.1 Switched Access Service (Cont'd)

(B) Local Transport (Cont'd)

(2) Flat Rates – Switched Access Local Transport

(a) Direct Trunked Transport

	Monthly Rate	
(i) Direct Trunked Facility, Per Mile		
Voice Grade – Two & Four Wire	$ 5.80	(I)
High Capacity DS1	$ 27.22	
High Capacity DS3	$ 237.10	
(ii) Direct Trunked Termination, Per Termination		
Voice Grade – Two & Four Wire	$ 58.34	
High Capacity DS1	$ 141.22	
High Capacity DS3	$ 906.84	
(iii) Multiplexing, Per Arrangement		
DS3 to DS1	$ 827.39	
DS1 to Voice	$ 319.45	(I)

(Continued)

ACCESS SERVICE

10. Rates and Charges (Cont'd)

10.5 Custer Telephone Cooperative, Inc. (Cont'd)

10.5.1 Switched Access Service (Cont'd)

	Monthly Rate	
(C) End Office Charges		
Local Switching Originating, Per Access Minute:		
Premium Access LS1 (FGA and FGB)	$0.0113	
Premium Access LS2 (FGC and FGD)	$0.0113	
Local Switching Terminating:		
(1) Premium Access: Per Terminating Access Minute:*		
- Effective 7-1-2015	$ 0.018465	(C)(R)

* The composite Terminating Local Switching rate shown above include the Terminating Information Surcharge rate element.

(Continued)

ACCESS SERVICE

10. Rates and Charges (Cont'd)

10.5 Custer Telephone Cooperative, Inc. (Cont'd)

10.5.1 Switched Access Service (Cont'd)

	Monthly Rate	
(C) End Office Charges (Cont'd)		
(2) Information Surcharge Terminating, Combined in rates 10.5.1(C)(1)	$ 0.000000	(C) (C)
		(D) (D)
(D) 800 Data Base Access Service		
(1) Basic Rate, per query	$0.0035	
(2) Vertical Features Rate, per query (replaces basic rate)	$0.007165	
		(D) (D)

(Continued)

ACCESS SERVICE

10. Rates and Charges (Cont'd)

10.5 Custer Telephone Cooperative, Inc. (Cont'd)

10.5.1 Switched Access Service (Cont'd) (T)

	Nonrecurring Charges	Per Access Minute
(E) Carrier Common Line Access Service		
(1) Per Originating Minute		$0.1305

(D)

10.5.2 Special Access Service

		Monthly Rates*
(A) Channel Termination		
(1) Voice Grade Channel Per Termination		
(a) Two-Wire	$223.24	$28.96
(b) Four-Wire	223.24	43.17
(2) Metallic Channel Per Termination		
Two-Wire	223.24	28.96

* The Channel Termination rate includes non-chargeable Channel Interfaces as set forth in 6.1.7.

(D)

(Continued)

ACCESS SERVICE

10. Rates and Charges (Cont'd)

10.5 Custer Telephone Cooperative, Inc. (Cont'd)

10.5.2 Special Access Service (Cont'd)

	Nonrecurring Charges	Monthly Rates*	Daily Rates
(A) Channel Termination (Cont'd)			
(3) Program Audio Per Termination	$121.00	$33.77	$3.38
(a) Optional Features and Functions			
(i) Bridging, Distribution Amplifier Per Port	.00	21.71	2.18
(ii) Gain Conditioning Per Service	.00	11.07	0.11
(iii) Stereo Per Service	.00	11.07	0.11
(4) Video Service Per Termination	223.24	425.40	233.97

* The Channel Termination rate includes non-chargeable Channel Interfaces as set forth in 6.1.7.

(Continued)

ACCESS SERVICE

10. Rates and Charges (Cont'd)

10.5 Custer Telephone Cooperative, Inc. (Cont'd)

10.5.2 Special Access Service (Cont'd)

	Nonrecurring Charges	Monthly Rates*
(A) Channel Termination (Cont'd)		
(5) Digital Data Service Per Termination	$223.24	$53.58
(a) Optional Features and Functions		
(i) Central Office Bridging Per Port	.00	3.37
(ii) Loop Transfer Arrangement Per Four Port Arrangement	.00	6.75
(iii) Public Packet Switching Network Interface Arrangement	.00	18.21
(b) Channel Service Unit Per Termination	.00	18.60

* The Channel Termination rate includes non-chargeable Channel Interfaces as set forth in 6.1.7.

(Continued)

ACCESS SERVICE

10. Rates and Charges (Cont'd)

10.5 Custer Telephone Cooperative, Inc. (Cont'd)

10.5.2 Special Access Service (Cont'd)

	Nonrecurring Charges	Monthly Rates*
(A) Channel Termination (Cont'd)		
(6) High Capacity (DS1) Service Per Termination	$223.24	$150.62
(a) Optional Features and Functions		
(i) Central Office Multiplexing, Per Arrangement	.00	182.44
(ii) Automatic Loop Transfer, Per Arrangement	.00	440.13
(iii) Transfer Arrangement Per Four Port Arrangement, Including Control Channel Termination	.00	187.03

* The Channel Termination rate includes non-chargeable Channel Interfaces as set forth in 6.1.7.

(Continued)

ACCESS SERVICE

10. Rates and Charges (Cont'd)

10.5 Custer Telephone Cooperative, Inc. (Cont'd)

10.5.2 Special Access Service (Cont'd)

	Nonrecurring Charges	Monthly Rates**	Daily Rates
(A) Channel Termination (Cont'd)			
(7) High Capacity (DS3) Service Per Termination	$223.24	ICB	$.00
(B) Channel Mileage, Per Mile			
(1) Applies to Voice Grade, Metallic Channel, Program Audio, and Video Service	.00	$5.43 (R)	12.33*
(2) Digital Data Service***	.00	7.32 (R)	.00
(3) High Capacity Service			
(a) DS1	.00	25.46 (R)	.00
(b) DS3	.00	ICB	.00

* Applies only to Program Audio and Video Services.

** The Channel Termination rate includes non-chargeable Channel Interfaces as set forth in 6.1.7.

*** Digital Data is provided at the same rate for the following speeds: 2.4, 4.8, 9.6, 19.2, 56.0, and 64.0 Kbps. Speeds are limited by technological capacity of end office switches. All speeds are not available in all end offices.

(Continued)

ACCESS SERVICE

10. Rates and Charges (Cont'd)

10.5 Custer Telephone Cooperative, Inc. (Cont'd)

10.5.2 Special Access Service (Cont'd)

	Nonrecurring Charges	Monthly Rates
(C) Bridging		
Per Port	$.00	$6.50

(D) Term Discounts (N)

(1) Service may be ordered at the customer's option on a monthly rate basis or for Term Discount periods of 36 months (3 years) or 60 months (5 years).

(2) The customer must specify the length of the service commitment period at the time the service is ordered.

(3) Discontinuance of Service

Discontinuance charges, as described below, will apply to the portion of the service being disconnected when the customer chooses to disconnect all or a portion of its service prior to the expiration of the term commitment period. (N)

(M)

(M)

(M) Rates and Charges 10.5.3 now shown on Original Sheet Number 315.2.

(Continued)

ACCESS SERVICE

10. Rates and Charges (Cont'd) (N)

10.5 Custer Telephone Cooperative, Inc. (Cont'd)

10.5.2 Special Access Service (Cont'd)

(D) Term Discounts (Cont'd)

(3) Discontinuance of Service (Cont'd)

Should the customer choose to discontinue a Term Discount plan prior to the completion of the minimum service period, discontinuance charges will apply. Discontinuance charges equal to one-hundred percent of the total undiscounted monthly rates, less any amounts previously paid, will apply for the minimum service period.

(4)

Term Commitment	Discount Percentage
36 months	10%
60 months	20%

(N)

(Continued)

ACCESS SERVICE

10. Rates and Charges (Cont'd) (N)

10.5 Custer Telephone Cooperative, Inc. (Cont'd) (N)

10.5.3 Miscellaneous Services (M)

	Basic Time, Scheduled Working Hours	Overtime, Outside Scheduled Working Hours
(A) Additional Engineering Periods		
Per Engineering, 1/2 hour or fraction thereof	$17.50	$24.50
(B) Additional Labor		
Per Technician, 1/2 hour or fraction thereof	17.50	24.50
(C) Maintenance of Service		
Per Technician, 1/2 hour or fraction thereof	17.50	24.50 (M)

(M) Rates and Charges 10.5.3 previously shown on Original Sheet Number 315.

(Continued)

ACCESS SERVICE

10. Rates and Charges (Cont'd)

10.5 Custer Telephone Cooperative, Inc. (Cont'd)

10.5.3 Miscellaneous Services (Cont'd)

	Basic Time, Scheduled Working Hours	Overtime, Outside Scheduled Working Hours	
(D) Programming Service			
Per Programmer, 1/2 hour or fraction thereof	$30.00	$45.00	
		Non-Recurring Charges	(T)
(E) Intrastate IntraLATA Primary Interexchange Carrier (LPIC) Change Charge:			(C)
Per Occurrence, Per Line:			
(1) Manually Processed		$5.50	
(2) Electronically Processed		1.25	
(3) PIC & LPIC for same carrier, same transaction:			
(a) Manually Processed		2.75	
(b) Electronically Processed		.62	(C)
			(M)
			(M)

(M) Material now shown on Sheet Number 316.1. Rate (E) was changed in compliance with Order No. 29806.

(Continued)

ACCESS SERVICE

10. Rates and Charges (Cont'd)

10.5 Custer Telephone Cooperative, Inc. (Cont'd)

10.5.3 Miscellaneous Services (Cont'd)

		Non-Recurring Charges	
(F)	SS7 Signaling Conversion		
	Per DS1	N/C	
(G)	Access Order Charge	See Section 4	
(H)	Service Date Change Charge	See Section 4.5.1	
(I)	Late Payment Charge	See Section 2.4.1(B)(4)	(N)

(Continued)

ACCESS SERVICE

10. Rates and Charges (Cont'd)

10.6 Direct Communications Rockland, Inc.

10.6.1 Switched Access Service

	Nonrecurring Charges	Monthly Rate	
(A) Nonrecurring Charges			
Per Line Connected	$290.13		
(B) Local Transport, Premium Rates			
(1) Entrance Facility Per Termination			
Voice Grade (2-Wire)	$ 481.03	$ 87.33	(I)
Voice Grade (4-Wire)	$ 481.03	$ 139.75	
High Capacity DS1	$ 352.76	$ 425.78	
High Capacity DS3	$ 475.69	$ 3,887.69	
(2) Direct Trunked Transport			
(a) Direct Trunked Facility, Per Mile			
Voice Grade (2 & 4 Wire)		$ 6.23	
High Capacity DS1		$ 29.10	
High Capacity DS3		$ 254.11	(I)

(Continued)

ACCESS SERVICE

10. Rates and Charges (Cont'd)

10.6 Direct Communications Rockland, Inc. (Cont'd)

10.6.1 Switched Access Service (Cont'd)

	Monthly Rate	
(B) Local Transport (Cont'd)		
(2) Direct Trunked Transport (Cont'd)		
(b) Direct Trunked Termination, Per Termination		
Voice Grade (2 & 4 Wire)	$ 62.52	(I)
High Capacity DS1	$ 151.36	
High Capacity DS3	$ 971.91	
(c) Multiplexing, Per Arrangement		
DS3 to DS1	$ 886.75	(I)
(3) Tandem Switched Transport		
(a) Tandem Switched Facility, Per Access Minute, Per Mile		
- Originating	$ 0.0000854	
- Terminating	$ 0.000430	(I)

(Continued)

ACCESS SERVICE

10. Rates and Charges (Cont'd)

10.6 Direct Communications Rockland, Inc. (Cont'd)

10.6.1 Switched Access Service (Cont'd)

	Monthly Rate	
(B) Local Transport, Premium Rates (Cont'd)		
(3) Tandem Switched Transport (Cont'd)		
(b) Tandem Switched Termination, Per Access Minute, Per Termination		
- Originating	$ 0.002090	
- Terminating	$ 0.002234	(I)
(c) Tandem Switching, Per Access Minute, Per Tandem		
- Originating	$ 0.0000	
- Terminating	$ 0.0000	

(Continued)

ACCESS SERVICE

10. Rates and Charges (Cont'd)

10.6 Direct Communications Rockland, Inc. (Cont'd)

10.6.1 Switched Access Service (Cont'd)

	Monthly Rate	
(C) End Office, Premium Rates		
(1) Local Switching, Per Access Minute		
- Originating	$ 0.01757	
- Terminating:		
- Effective 7-1-2015	$ 0.018465	(C)(R)

* The composite Terminating Local Switching rate shown above include the Terminating Information Surcharge rate element.

(Continued)

ACCESS SERVICE

10. Rates and Charges (Cont'd)

10.6 Direct Communications Rockland, Inc. (Cont'd)

10.6.1 Switched Access Service (Cont'd)

	Monthly Rate	
(C) End Office (Local Switching) (Cont'd)		
(2) Information Surcharge Terminating, Combined in rates 10.6.1(C)(1)	$ 0.000000	(C) (C)
		(D) (D)
(D) 800 Data Base Access Service		
(1) Basic Rate, per query	$ 0.003500	
(2) Vertical Features Rate, per query (replaces basic rate)	$ 0.007165	
		(D) (D)

(Continued)

ACCESS SERVICE

10. Rates and Charges (Cont'd)

10.6 Direct Communications Rockland, Inc. (Cont'd)

10.6.1 Switched Access Service (Cont'd)

	Per Access Minute	
		(T)
		(T)
(E) Carrier Common Line Access Service		
(1) Per Originating Minute	$0.01000	
(2) Per Terminating Minute	0.00000	(R)

10.6.2 Special Access Service

		Monthly Rates*
(A) Channel Termination		
(1) Voice Grade Channel Per Termination		
(a) Two-Wire	$223.24	$46.75
(b) Four-Wire	223.24	71.63
(2) Metallic Channel Per Termination		
Two-Wire	223.24	46.75

* The Channel Termination rate includes non-chargeable Channel Interfaces as set forth in 6.1.7.

(Continued)

ACCESS SERVICE

10. Rates and Charges (Cont'd)

10.6 Direct Communications Rockland, Inc. (Cont'd)

10.6.2 Special Access Service (Cont'd)

	Nonrecurring Charges	Monthly Rates*	Daily Rates
(A) Channel Termination (Cont'd)			
(3) Program Audio Per Termination	$121.00	$33.77	$3.38
(a) Optional Features and Functions			
(i) Bridging, Distribution Amplifier Per Port	.00	21.71	2.18
(ii) Gain Conditioning Per Service	.00	11.07	0.11
(iii) Stereo Per Service	.00	11.07	0.11
(4) Video Service Per Termination	223.24	425.40	233.97

* The Channel Termination rate includes non-chargeable Channel Interfaces as set forth in 6.1.7.

(Continued)

ACCESS SERVICE

10. Rates and Charges (Cont'd)

10.6 Direct Communications Rockland, Inc. (Cont'd)

10.6.2 Special Access Service (Cont'd)

	Nonrecurring Charges	Monthly Rates*
(A) Channel Termination (Cont'd)		
(5) Digital Data Service Per Termination	$223.24	ICB
(a) Optional Features and Functions		
(i) Central Office Bridging Per Port	.00	$3.37
(ii) Loop Transfer Arrangement Per Four Port Arrangement	.00	6.75
(iii) Public Packet Switching Network Interface Arrangement	.00	18.21
(b) Channel Service Unit Per Termination	.00	18.60

* The Channel Termination rate includes non-chargeable Channel Interfaces as set forth in 6.1.7.

(Continued)

ACCESS SERVICE

10. Rates and Charges (Cont'd)

10.6 Direct Communications Rockland, Inc. (Cont'd)

10.6.2 Special Access Service (Cont'd)

	Nonrecurring Charges	Monthly Rates*
(A) Channel Termination (Cont'd)		
(6) High Capacity (DS1) Service Per Termination	$223.24	ICB
(a) Optional Features and Functions		
(i) Central Office Multiplexing, Per Arrangement	.00	$182.44
(ii) Automatic Loop Transfer, Per Arrangement	.00	440.13
(iii) Transfer Arrangement Per Four Port Arrangement, Including Control Channel Termination	.00	187.03

* The Channel Termination rate includes non-chargeable Channel Interfaces as set forth in 6.1.7.

(Continued)

ACCESS SERVICE

10. Rates and Charges (Cont'd)

10.6 Direct Communications Rockland, Inc. (Cont'd)

10.6.2 Special Access Service (Cont'd)

	Nonrecurring Charges	Monthly Rates**	Daily Rates
(A) Channel Termination (Cont'd)			
(7) High Capacity (DS3) Service Per Termination	$223.24	ICB	$.00
(B) Channel Mileage, Per Mile			
(1) Applies to Voice Grade, Metallic Channel, Program Audio, and Video Service	.00	$36.90	3.69*
(2) Digital Data Service***	.00	ICB	.00
(3) High Capacity Service			
(a) DS1	.00	ICB	.00
(b) DS3	.00	ICB	.00

* Applies only to Program Audio and Video Services.

** The Channel Termination rate includes non-chargeable Channel Interfaces as set forth in 6.1.7.

*** Digital Data is provided at the same rate for the following speeds: 2.4, 4.8, 9.6, 19.2, 56.0, and 64.0 Kbps. Speeds are limited by technological capacity of end office switches. All speeds are not available in all end offices.

(Continued)

ACCESS SERVICE

10. Rates and Charges (Cont'd)

10.6 Direct Communications Rockland, Inc. (Cont'd)

10.6.2 Special Access Service (Cont'd)

	Nonrecurring Charges	Monthly Rates
(C) Bridging		
Per Port	$.00	$6.50

10.6.3 Miscellaneous Services

	Basic Time, Scheduled Working Hours	Overtime, Outside Scheduled Working Hours
(A) Additional Engineering Periods		
Per Engineering, 1/2 hour or fraction thereof	$17.50	$24.50
(B) Additional Labor		
Per Technician, 1/2 hour or fraction thereof	17.50	24.50

(Continued)

ACCESS SERVICE

10. Rates and Charges (Cont'd)

10.6 Direct Communications Rockland, Inc. (Cont'd)

10.6.3 Miscellaneous Services (Cont'd)

	Basic Time, Scheduled Working Hours	Overtime, Outside Scheduled Working Hours	
(C) Maintenance of Service			
Per Technician, 1/2 hour or fraction thereof	$17.50	$24.50	
(D) Programming Service			
Per Programmer, 1/2 hour or fraction thereof	30.00	45.00	
(E) Presubscription			
(1) Manual PIC Change Charges, per line or trunk			(C)
- When only the IntraLATA PIC is changed	5.50		
- When both the InterLATA and IntraLATA PICs are changed simultaneously	2.75		
(2) Electronic PIC change charge, per line or trunk	N/A		(C)
		Nonrecurring Charges	
(F) SS7 Signaling Conversion			
Per DS1		N/C	
(G) Access Order Charge		See Section 4	

(Continued)

ACCESS SERVICE

10. Rates and Charges (Cont'd)

10.6 Direct Communications Rockland, Inc. (Cont'd)

10.6.3 Miscellaneous Services (Cont'd)

	Nonrecurring Charges
(H) Service Date Change Charge	See Section 4.5.1

(D)

(D)

(Continued)

ACCESS SERVICE

10. Rates and Charges (Cont'd)

10.6 Direct Communications Rockland, Inc. (Cont'd)

(D)

(D)

(Continued)

ACCESS SERVICE

10. Rates and Charges (Cont'd)

10.7 Farmers Mutual Tel. Co.

10.7.1 Switched Access Service

	Nonrecurring Charges	Monthly Rate	
(A) Nonrecurring Charges			
Per Line Connected	$290.13		
(B) Local Transport (Per Access Minute)			
Premium Access - Originating*		$0.02795	
Premium Access – Terminating*:			
(1) Tandem Switched Transport			
(a) Tandem Switched Facility, Per Terminating Access Minute, Per Mile		$0.000201	(I)
(b) Tandem Switched Termination, Per Terminating Access Minute, Per Termination		$0.001047	(I)

* The Local Transport rate includes non-chargeable Interface Groups and Optional Features as set forth in Section 5.

(Continued)

ACCESS SERVICE

10. Rates and Charges (Cont'd)

10.7 Farmers Mutual Tel. Co. (Cont'd)

10.7.1 Switched Access Service (Cont'd)

	Monthly Rate	
(B) Local Transport (Cont'd)		
(2) Flat Rates – Switched Access Local Transport		
(a) Direct Trunked Transport		
(i) Direct Trunked Facility, Per Mile		
Voice Grade – Two & Four Wire	$ 2.98	(I)
High Capacity DS1	$ 13.99	
High Capacity DS3	$ 121.91	
(ii) Direct Trunked Termination, Per Termination		
Voice Grade – Two & Four Wire	$ 30.00	
High Capacity DS1	$ 72.61	
High Capacity DS3	$ 466.26	
(iii) Multiplexing, Per Arrangement		
DS3 to DS1	$ 425.43	
DS1 to Voice	$ 164.24	(I)

(Continued)

ACCESS SERVICE

10. Rates and Charges (Cont'd)

10.7 Farmers Mutual Tel. Co. (Cont'd)

10.7.1 Switched Access Service (Cont'd)

	Monthly Rate	
(C) End Office Charges		
Local Switching Originating, Per Access Minute:		
Premium Access LS1 (FGA and FGB)	$0.02795	
Premium Access LS2 (FGC and FGD)	$0.02795	
Local Switching Terminating:		
(1) Premium Access: Per Terminating Access Minute:*		
- Effective 7-1-2015	$ 0.018465	(C)(R)

* The composite Terminating Local Switching rate shown above include the Terminating Information Surcharge rate element.

(Continued)

ACCESS SERVICE

10. Rates and Charges (Cont'd)

10.7 Farmers Mutual Tel. Co. (Cont'd)

10.7.1 Switched Access Service (Cont'd)

	Monthly Rate	
(C) End Office Charges (Cont'd)		
(2) Information Surcharge Terminating, Combined in rates 10.7.1(C)(1)	$ 0.000000	(C) (C)
		(D) (D)
(D) 800 Data Base Access Service		
(1) Basic Rate, per query	$0.0035	
(2) Vertical Features Rate, per query (replaces basic rate)	$0.007165	
		(D) (D)

(Continued)

ACCESS SERVICE

10. Rates and Charges (Cont'd)

10.7 Farmers Mutual Tel. Co. (Cont'd) (T)

10.7.1 Switched Access Service (Cont'd) (T)

	Per Access Minute
(E) Carrier Common Line Access Service	
(1) Per Originating Minute	$0.02600

(D)

10.7.2 Special Access Service

	Nonrecurring Charges	Monthly Rates*
(A) Channel Termination		
(1) Voice Grade Channel Per Termination		
(a) Two-Wire	$223.24	$28.68
(b) Four-Wire	223.24	42.73
(2) Metallic Channel Per Termination		
Two-Wire	223.24	28.68

* The Channel Termination rate includes non-chargeable Channel Interfaces as set forth in 6.1.7.

(D)

(Continued)

ACCESS SERVICE

10. Rates and Charges (Cont'd)

10.7 Farmers Mutual Tele. Company (Cont'd)

10.7.2 Special Access Service (Cont'd)

	Nonrecurring Charges	Monthly Rates*	Daily Rates
(A) Channel Termination (Cont'd)			
(3) Program Audio Per Termination	$121.00	$33.77	$3.38
(a) Optional Features and Functions			
(i) Bridging, Distribution Amplifier Per Port	.00	21.71	2.18
(ii) Gain Conditioning Per Service	.00	11.07	0.11
(iii) Stereo Per Service	.00	11.07	0.11
(4) Video Service Per Termination	223.24	425.40	233.97

* The Channel Termination rate includes non-chargeable Channel Interfaces as set forth in 6.1.7.

(Continued)

ACCESS SERVICE

10. Rates and Charges (Cont'd)

10.7 Farmers Mutual Tele. Company (Cont'd)

10.7.2 Special Access Service (Cont'd)

	Nonrecurring Charges	Monthly Rates*
(A) Channel Termination (Cont'd)		
(5) Digital Data Service Per Termination	$223.24	$53.06
(a) Optional Features and Functions		
(i) Central Office Bridging Per Port	.00	3.37
(ii) Loop Transfer Arrangement Per Four Port Arrangement	.00	6.75
(iii) Public Packet Switching Network Interface Arrangement	.00	18.21
(b) Channel Service Unit Per Termination	.00	18.60

* The Channel Termination rate includes non-chargeable Channel Interfaces as set forth in 6.1.7.

(Continued)

ACCESS SERVICE

10. Rates and Charges (Cont'd)

10.7 Farmers Mutual Tele. Company (Cont'd)

10.7.2 Special Access Service (Cont'd)

	Nonrecurring Charges	Monthly Rates*
(A) Channel Termination (Cont'd)		
(6) High Capacity (DS1) Service Per Termination	$223.24	$306.24
(a) Optional Features and Functions		
(i) Central Office Multiplexing, Per Arrangement	.00	182.44
(ii) Automatic Loop Transfer, Per Arrangement	.00	440.13
(iii) Transfer Arrangement Per Four Port Arrangement, Including Control Channel Termination	.00	187.03

* The Channel Termination rate includes non-chargeable Channel Interfaces as set forth in 6.1.7.

(Continued)

ACCESS SERVICE

10. Rates and Charges (Cont'd)

10.7 Farmers Mutual Tele. Company (Cont'd)

10.7.2 Special Access Service (Cont'd)

	Nonrecurring Charges	Monthly Rates**	Daily Rates
(A) Channel Termination (Cont'd)			
(7) High Capacity (DS3) Service Per Termination	$223.24	ICB	$.00
(B) Channel Mileage, Per Mile			
(1) Applies to Voice Grade, Metallic Channel, Program Audio, and Video Service	.00	$33.24	3.32*
(2) Digital Data Service***	.00	66.48	.00
(3) High Capacity Service			
(a) DS1	.00	219.05	.00
(b) DS3	.00	ICB	.00

* Applies only to Program Audio and Video Services.

** The Channel Termination rate includes non-chargeable Channel Interfaces as set forth in 6.1.7.

*** Digital Data is provided at the same rate for the following speeds: 2.4, 4.8, 9.6, 19.2, 56.0, and 64.0 Kbps. Speeds are limited by technological capacity of end office switches. All speeds are not available in all end offices.

(Continued)

ACCESS SERVICE

10. Rates and Charges (Cont'd)

10.7 Farmers Mutual Tele. Company (Cont'd)

10.7.2 Special Access Service (Cont'd)

	Nonrecurring Charges	Monthly Rates
(C) Bridging		
Per Port	$.00	$6.50

10.7.3 Miscellaneous Services

	Basic Time, Scheduled Working Hours	Overtime, Outside Scheduled Working Hours
(A) Additional Engineering Periods		
Per Engineering, 1/2 hour or fraction thereof	$17.50	$24.50
(B) Additional Labor		
Per Technician, 1/2 hour or fraction thereof	17.50	24.50

(Continued)

ACCESS SERVICE

10. Rates and Charges (Cont'd)

10.7 Farmers Mutual Tele. Company (Cont'd)

10.7.3 Miscellaneous Services (Cont'd)

	Basic Time, Scheduled Working Hours	Overtime, Outside Scheduled Working Hours
(C) Maintenance of Service		
Per Technician, 1/2 hour or fraction thereof	$17.50	$24.50
(D) Programming Service		
Per Programmer, 1/2 hour or fraction thereof	30.00	45.00

(M)

(M)

(M) Material now shown on Sheet Number 334.1.

(Continued)

ACCESS SERVICE

10. Rates and Charges (Cont'd)

10.7 Farmers Mutual Tele. Company (Cont'd)

10.7.3 Miscellaneous Services (Cont'd)

		Non-Recurring Charges	
(E)	Intrastate IntraLATA Primary Interexchange Carrier (LPIC) Change Charge:		
	Per Occurrence, Per Line:		
	(1) Manually Processed	$5.50	
	(2) Electronically Processed	1.25	
	(3) PIC & LPIC for same carrier, same transaction:		
	(a) Manually Processed	2.75	
	(b) Electronically Processed	.62	
(F)	SS7 Signaling Conversion		
	Per DS1	N/C	
(G)	Access Order Charge	See Section 4	
(H)	Service Date Change Charge	See Section 4.5.1	
(I)	Late Payment Charge	See Section 2.4.1(B)(4)	(N)

(Continued)

ACCESS SERVICE

10. Rates and Charges (Cont'd)

10.8 Filer Mutual Telephone Company

10.8.1 Switched Access Service

	Nonrecurring Charges	Monthly Rate	
(A) Nonrecurring Charges			
Per Line Connected	$290.13		
(B) Local Transport (Per Access Minute)			
Premium Access– Originating*		$0.0200	
Premium Access – Terminating*:			
(1) Tandem Switched Transport			
(a) Tandem Switched Facility, Per Terminating Access Minute, Per Mile		$0.000430	(I)
(b) Tandem Switched Termination, Per Terminating Access Minute, Per Termination		$0.002234	(I)

* The Local Transport rate includes non-chargeable Interface Groups and Optional Features as set forth in Section 5.

(Continued)

ACCESS SERVICE

10. Rates and Charges (Cont'd)

10.8 Filer Mutual Telephone Company (Cont'd)

10.8.1 Switched Access Service (Cont'd)

(B) Local Transport, Premium Rates (Cont'd)

(2) Flat Rates – Switched Access Local Transport

(a) Direct Trunked Transport

	Monthly Rate	
(i) Direct Trunked Facility, Per Mile		
Voice Grade – Two & Four Wire	$ 4.34	(I)
High Capacity DS1	$ 20.37	
High Capacity DS3	$ 177.43	
(ii) Direct Trunked Termination, Per Termination		
Voice Grade – Two & Four Wire	$ 43.66	
High Capacity DS1	$ 105.69	
High Capacity DS3	$ 678.65	
(iii) Multiplexing, Per Arrangement		
DS3 to DS1	$ 619.19	
DS1 to Voice	$ 239.06	(I)

(Continued)

ACCESS SERVICE

10. Rates and Charges (Cont'd)

10.8 Filer Mutual Telephone Company (Cont'd)

10.8.1 Switched Access Service (Cont'd)

	Monthly Rate	
(C) End Office Charges		
Local Switching Originating, Per Access Minute:		
Premium Access LS1 (FGA and FGB)	$0.0200	
Premium Access LS2 (FGC and FGD)	$0.0200	
Local Switching Terminating:		
(1) Premium Access: Per Terminating Access Minute:*		
- Effective 7-1-2015	$ 0.015472	(C)(R)

* The composite Terminating Local Switching rate shown above include the Terminating Information Surcharge rate element.

(Continued)

ACCESS SERVICE

10. Rates and Charges (Cont'd)

10.8 Filer Mutual Telephone Company (Cont'd)

10.8.1 Switched Access Service (Cont'd)

	Monthly Rate	
(C) End Office Charges (Cont'd)		
(2) Information Surcharge Terminating, Combined in rates 10.8.1(C)(1)	$ 0.000000	(C) (C)

(D)

(D)

(D) 800 Data Base Access Service

(1) Basic Rate, per query	$ 0.0035
(2) Vertical Features Rate, per query (replaces basic rate)	$ 0.007165

(D)

(D)

(Continued)

ACCESS SERVICE

10. Rates and Charges (Cont'd)

10.8 Filer Mutual Telephone Company (Cont'd)

10.8.1 Switched Access Service (Cont'd)

	Nonrecurring Charges	Per Access Minute
(E) Carrier Common Line Access Service		
(1) Per Originating Minute		$0.02485

(D)

10.8.2 Special Access Service

		Monthly Rates*
(A) Channel Termination		
(1) Voice Grade Channel Per Termination		
(a) Two-Wire	$223.24	$28.68
(b) Four-Wire	223.24	42.73
(2) Metallic Channel Per Termination		
Two-Wire	223.24	28.68

* The Channel Termination rate includes non-chargeable Channel Interfaces as set forth in 6.1.7.

(Continued)

ACCESS SERVICE

10. Rates and Charges (Cont'd)

10.8 Filer Mutual Telephone Company (Cont'd)

10.8.2 Special Access Service (Cont'd)

	Nonrecurring Charges	Monthly Rates*	Daily Rates
(A) Channel Termination (Cont'd)			
(3) Program Audio Per Termination	$121.00	$33.77	$3.38
(a) Optional Features and Functions			
(i) Bridging, Distribution Amplifier Per Port	.00	21.71	2.18
(ii) Gain Conditioning Per Service	.00	11.07	0.11
(iii) Stereo Per Service	.00	11.07	0.11
(4) Video Service Per Termination	223.24	425.40	233.97

* The Channel Termination rate includes non-chargeable Channel Interfaces as set forth in 6.1.7.

(Continued)

ACCESS SERVICE

10. Rates and Charges (Cont'd)

10.8 Filer Mutual Telephone Company (Cont'd)

10.8.2 Special Access Service (Cont'd)

	Nonrecurring Charges	Monthly Rates*
(A) Channel Termination (Cont'd)		
(5) Digital Data Service Per Termination	$223.24	$53.06
(a) Optional Features and Functions		
(i) Central Office Bridging Per Port	.00	3.37
(ii) Loop Transfer Arrangement Per Four Port Arrangement	.00	6.75
(iii) Public Packet Switching Network Interface Arrangement	.00	18.21
(b) Channel Service Unit Per Termination	.00	18.60

* The Channel Termination rate includes non-chargeable Channel Interfaces as set forth in 6.1.7.

(Continued)

ACCESS SERVICE

10. Rates and Charges (Cont'd)

10.8 Filer Mutual Telephone Company (Cont'd)

10.8.2 Special Access Service (Cont'd)

	Nonrecurring Charges	Monthly Rates*
(A) Channel Termination (Cont'd)		
(6) High Capacity (DS1) Service Per Termination	$223.24	$149.17
(a) Optional Features and Functions		
(i) Central Office Multiplexing, Per Arrangement	.00	182.44
(ii) Automatic Loop Transfer, Per Arrangement	.00	440.13
(iii) Transfer Arrangement Per Four Port Arrangement, Including Control Channel Termination	.00	187.03

* The Channel Termination rate includes non-chargeable Channel Interfaces as set forth in 6.1.7.

(Continued)

ACCESS SERVICE

10. Rates and Charges (Cont'd)

10.8 Filer Mutual Telephone Company (Cont'd)

10.8.2 Special Access Service (Cont'd)

	Nonrecurring Charges	Monthly Rates**	Daily Rates
(A) Channel Termination (Cont'd)			
(7) High Capacity (DS3) Service Per Termination	$223.24	ICB	$.00
(B) Channel Mileage, Per Mile			
(1) Applies to Voice Grade, Metallic Channel, Program Audio, and Video Service	.00	$36.64	3.66*
(2) Digital Data Service***	.00	73.28	.00
(3) High Capacity Service			
(a) DS1	.00	185.76	.00
(b) DS3	.00	ICB	.00

* Applies only to Program Audio and Video Services.

** The Channel Termination rate includes non-chargeable Channel Interfaces as set forth in 6.1.7.

*** Digital Data is provided at the same rate for the following speeds: 2.4, 4.8, 9.6, 19.2, 56.0, and 64.0 Kbps. Speeds are limited by technological capacity of end office switches. All speeds are not available in all end offices.

(Continued)

ACCESS SERVICE

10. Rates and Charges (Cont'd)

10.8 Filer Mutual Telephone Company (Cont'd)

10.8.2 Special Access Service (Cont'd)

	Nonrecurring Charges	Monthly Rates
(C) Bridging		
Per Port	$.00	$6.50

10.8.3 Miscellaneous Services

	Basic Time, Scheduled Working Hours	Overtime, Outside Scheduled Working Hours
(A) Additional Engineering Periods		
Per Engineering, 1/2 hour or fraction thereof	$17.50	$24.50
(B) Additional Labor		
Per Technician, 1/2 hour or fraction thereof	17.50	24.50

(Continued)

ACCESS SERVICE

10. Rates and Charges (Cont'd)

10.8 Filer Mutual Telephone Company (Cont'd)

10.8.3 Miscellaneous Services (Cont'd)

	Basic Time, Scheduled Working Hours	Overtime, Outside Scheduled Working Hours	
(C) Maintenance of Service			
Per Technician, 1/2 hour or fraction thereof	$17.50	$24.50	
(D) Programming Service			
Per Programmer, 1/2 hour or fraction thereof	30.00	45.00	
(E) Presubscription			
(1) Manual PIC Change Charges, per line or trunk			(C)
- When only the IntraLATA PIC is changed	5.50		
- When both the InterLATA and IntraLATA PICs are changed simultaneously	2.75		
(2) Electronic PIC change charge, per line or trunk	N/A		(C)
		Nonrecurring Charges	
(F) SS7 Signaling Conversion			
Per DS1		N/C	
(G) Access Order Charge		See Section 4	
(H) Service Date Change Charge		See Section 4.5.1	

(Continued)

ACCESS SERVICE (N)

10. Rates and Charges (Cont'd)

10.8 Filer Mutual Telephone Company (Cont'd)

10.8.3 Miscellaneous Services (Cont'd)

	Nonrecurring Charges	
(I) Late Payment Charge	See Section 2.4.l (B)(4)	(N)

(Continued) (N)

ACCESS SERVICE

10. Rates and Charges (Cont'd)

10.9 Fremont Telcom Co.

10.9.1 Switched Access Service

	Nonrecurring Charges	Per Access Minute IntraLATA	Per Access Minute InterLATA	
(A) Nonrecurring Charges				
Per Line Connected	$290.13			
(B) Local Transport (Per Access Minute)				
Premium Access, Originating*		$0.02169	$0.0108	
Premium Access – Terminating*:				
(1) Tandem Switched Transport				
(a) Tandem Switched Facility, Per Terminating Access Minute, Per Mile		$0.00043	$0.00043	(I)

* The Local Transport rate includes non-chargeable Interface Groups and Optional Features as set forth in Section 5.

(Continued)

ACCESS SERVICE

10. Rates and Charges (Cont'd)

10.9 Fremont Telcom Co. (Cont'd)

10.9.1 Switched Access Service (Cont'd)

	Per Access Minute IntraLATA	Per Access Minute InterLATA	
(B) Local Transport (Cont'd) (Per Access Minute)			
Premium Access – Terminating*: (Cont'd)			
(1) Tandem Switched Transport (Cont'd)			
(b) Tandem Switched Termination, Per Terminating Access Minute, Per Termination	$0.002234	$0.002234	(I)

	Monthly Rate	
(2) Flat Rates – Switched Access Local Transport		
(a) Direct Trunked Transport		
(i) Direct Trunked Facility, Per Mile		
Voice Grade – Two & Four Wire	$ 2.10	(I)
High Capacity DS1	$ 9.82	|
High Capacity DS3	$ 84.45	(I)

* The Local Transport rate includes non-chargeable Interface Groups and Optional Features as set forth in Section 5.

(Continued)

ACCESS SERVICE

10. Rates and Charges (Cont'd)

10.9 Fremont Telcom Co. (Cont'd)

10.9.1 Switched Access Service (Cont'd)

(B) Local Transport (Cont'd)

(2) Flat Rates – Switched Access Local Transport (Cont'd)

(a) Direct Trunked Transport (Cont'd)

	Monthly Rate	
(ii) Direct Trunked Termination, Per Termination		
Voice Grade – Two & Four Wire	$ 21.02	(I)
High Capacity DS1	$ 50.90	
High Capacity DS3	$ 326.82	
(iii) Multiplexing, Per Arrangement		
DS3 to DS1	$ 298.18	
DS1 to Voice	$ 115.13	(I)

(Continued)

ACCESS SERVICE

10. Rates and Charges (Cont'd)

10.9 Fremont Telcom Co. (Cont'd)

10.9.1 Switched Access Service (Cont'd)

	Per Access Minute		
	IntraLATA	InterLATA	
(C) End Office Charges			
Local Switching Originating, Per Access Minute:			
(1) Premium Access LS1 (FGA and FGB)	$0.02169	$0.0175	
(2) Premium Access LS2 (FGC and FGD)	$0.02169	$0.0175	
Local Switching Terminating:			
(1) Premium Access: Per Terminating Access Minute:*			
- Effective 7-1-2015	$ 0.012478	$ 0. 012478	(C)(R)

* The composite Terminating Local Switching rate shown above include the Terminating Information Surcharge rate element.

(Continued)

ACCESS SERVICE

10. Rates and Charges (Cont'd)

10.9 Fremont Telcom Co. (Cont'd)

10.9.1 Switched Access Service (Cont'd)

	Monthly Rate	
(C) End Office Charges (Cont'd)		
(2) Information Surcharge Terminating, Combined in rates 10.9.1(C)(1)	$ 0.000000	(C) (C)

(D)

(D)

(D)

(D)

(Continued)

ACCESS SERVICE

10. Rates and Charges (Cont'd)

10.9 Fremont Telcom Co. dba FairPoint Communications (Cont'd) (T)

10.9.1 Switched Access Service (Cont'd)

	Nonrecurring Charges	Per Access Minute	
(D) Carrier Common Line Access Service			(T)
(1) Per Originating Minute		$0.005094	
(2) Per Terminating Minute		0.000000	(R)

10.9.2 Special Access Service

		Monthly Rates*
(A) Channel Termination		
(1) Voice Grade (VG) 33 and 36		
(a) Channel Performance, End-Link or Mid-Link Per Termination		
(i) VG 33 – No Signaling	$100.00	$8.50
(ii) VG 36 – Data Stream	120.00	14.00

* The Channel Termination rate includes non-chargeable Channel Interfaces as set forth in 6.1.7.

(D)

(Continued)

ACCESS SERVICE

10. Rates and Charges (Cont'd)

10.9 Fremont Telcom Co. (Cont'd)

10.9.2 Special Access Service (Cont'd)

	Nonrecurring Charges	Monthly Rates*
(A) Channel Termination (Cont'd)		
(1) (Cont'd)		
(b) Network Access Channel, Per Termination		
(i) Two-Wire	$.00	$14.00
(ii) Four-Wire	.00	28.00
(c) Service Provisioning Charge		
(i) Initial	300.00	.00
(ii) Subsequent	175.00	.00

* The Channel Termination rate includes non-chargeable Channel Interfaces as set forth in 6.1.7.

(Continued)

ACCESS SERVICE

10. Rates and Charges (Cont'd)

10.9 Fremont Telcom Co. (Cont'd)

10.9.2 Special Access Service (Cont'd)

	Nonrecurring Charges	Monthly Rates*
(A) Channel Termination (Cont'd)		
(2) Voiceband and Data Service		
(a) Channel Connection, Per Termination		
(i) Inside Base Rate Area		
Two-Wire	$.00	$8.50
Four-Wire	.00	15.00
(ii) Outside Base Rate Area		
Four-Wire	.00	20.00
(b) Channel Transmission Parameter, Per Termination		
(i) Two-Point Connection		
Two-Wire		
• Voice A	259.00	9.00
• Voice C	242.00	10.50
• Data	351.00	26.00

* The Channel Termination rate includes non-chargeable Channel Interfaces as set forth in 6.1.7.

(Continued)

ACCESS SERVICE

10. Rates and Charges (Cont'd)

10.9 Fremont Telcom Co. (Cont'd)

10.9.2 Special Access Service (Cont'd)

	Nonrecurring Charges	Monthly Rates*
(A) Channel Termination (Cont'd)		
(2) (Cont'd)		
(b) (Cont'd)		
(i) (Cont'd)		
Four-Wire		
• Voice D, Customer Premises to Customer Premises	$268.00	$15.00
• Data	353.00	31.00
(ii) Multipoint Connection		
Two-Wire		
• Voice A	361.00	9.00
• Data	415.00	26.00
Four-Wire		
• Data	459.00	31.00

* The Channel Termination rate includes non-chargeable Channel Interfaces as set forth in 6.1.7.

(Continued)

ACCESS SERVICE

10. Rates and Charges (Cont'd)

10.9 Fremont Telcom Co. (Cont'd)

10.9.2 Special Access Service (Cont'd)

	Nonrecurring Charges	Monthly Rates
(A) Channel Termination (Cont'd)		
(2) (Cont'd)		
(b) (Cont'd)		
(iii) Circuit Configuration Change, Per Occurrence, Per Circuit		
Two-Wire	$352.00	$.00
Four-Wire	403.00	.00
(iv) Optional Features and Functions		
Loop Type Signaling Arrangement, Per Termination	.00	3.50
E&M Signaling Arrangement, Per Termination	.00	4.00
Central Office Data Bridging, Per Port	.00	6.50

(Continued)

ACCESS SERVICE

10. Rates and Charges (Cont'd)

10.9 Fremont Telcom Co. (Cont'd)

10.9.2 Special Access Service (Cont'd)

	Nonrecurring Charges	Monthly Rates
(A) Channel Termination (Cont'd)		
(3) Digital Data Service 56 Kbps		
(a) Channel Performance, Per Termination	$370.50	$75.00
(b) Move Charge, Per Local Distribution Channel	177.50	.00
(c) Network Access Channel, Per Termination	.00	15.00
(d) Optional Features and Functions, Per Termination		
(i) Bridging Network	.00	25.00
(ii) Secondary Channel (subsequent order only*)	85.00*	15.00
(4) High Capacity (DS1) Service, Per Termination	600.00	150.00
(5) High Capacity (DS3) Service Per Termination	ICB	ICB

* This charge applies when adding this feature on a subsequent order activity only.

(Continued)

ACCESS SERVICE

10. Rates and Charges (Cont'd)

10.9 Fremont Telcom Co. (Cont'd)

10.9.2 Special Access Service (Cont'd)

	Nonrecurring Charges	Monthly Rates
(B) Channel Mileage		
(1) Voice Grade 33 and 36		
(a) Over 0 to 8 Miles		
Fixed	$60.00	$22.00
Per Mile	.00	1.50
(b) Over 8 to 25 Miles		
Fixed	60.00	25.00
Per Mile	.00	2.00
(c) Over 25 to 50 Miles		
Fixed	60.00	27.00
Per Mile	.00	2.50
(d) Over 50 Miles		
Fixed	60.00	49.00
Per Mile	.00	2.35

(Continued)

ACCESS SERVICE

10. Rates and Charges (Cont'd)

10.9 Fremont Telcom Co. (Cont'd)

10.9.2 Special Access Service (Cont'd)

	Nonrecurring Charges	Monthly Rates
(B) Channel Mileage (Cont'd)		
(2) Voiceband and Data Service		
(a) Over 0 to 4 Miles		
Fixed	$.00	$11.50
Per Mile	.00	2.75
(b) Over 4 to 8 Miles		
Fixed	.00	14.50
Per Mile	.00	2.65
(c) Over 8 to 25 Miles		
Fixed	.00	19.00
Per Mile	.00	2.55
(d) Over 25 to 50 Miles		
Fixed	.00	29.00
Per Mile	.00	2.45
(e) Over 50 Miles		
Fixed	.00	55.00
Per Mile	.00	2.35

(Continued)

ACCESS SERVICE

10. Rates and Charges (Cont'd)

10.9 Fremont Telcom Co. (Cont'd)

10.9.2 Special Access Service (Cont'd)

	Nonrecurring Charges	Monthly Rates
(B) Channel Mileage (Cont'd)		
(3) Digital Data Service 56 Kbps, Each Interoffice Channel		
(a) Less than 1 Mile		
Fixed	$.00	$25.00
Per Mile	.00	0.00
(b) 1 to 25 Miles		
Fixed	.00	110.00
Per Mile	.00	1.20
(c) Over 25 Miles		
Fixed	.00	120.00
Per Mile, First 25 Miles	.00	1.20
Per Mile, Each Additional Mile	.00	0.95

(Continued)

ACCESS SERVICE

10. Rates and Charges (Cont'd)

10.9 Fremont Telcom Co. (Cont'd)

10.9.2 Special Access Service (Cont'd)

	Nonrecurring Charges	Monthly Rates
(B) Channel Mileage (Cont'd)		
(4) High Capacity Service		
(a) DS1		
(i) 0 Miles		
Fixed	$.00	$50.00
Per Mile	.00	9.00
(ii) Over 1 to 4 Miles		
Fixed	.00	100.00
Per Mile	.00	11.00
(iii) Over 4 to 8 Miles		
Fixed	.00	150.00
Per Mile	.00	13.00
(iv) Over 8 to 25 Miles		
Fixed	.00	200.00
Per Mile	.00	15.00

(Continued)

ACCESS SERVICE

10. Rates and Charges (Cont'd)

10.9 Fremont Telcom Co. (Cont'd)

10.9.2 Special Access Service (Cont'd)

	Nonrecurring Charges	Monthly Rates
(B) Channel Mileage (Cont'd)		
(4) High Capacity Service (Cont'd)		
(a) DS1 (Cont'd)		
(v) Over 25 to 50 Miles		
Fixed	$.00	$250.00
Per Mile	.00	17.00
(vi) Over 50 Miles		
Fixed	.00	300.00
Per Mile	.00	19.00
(b) DS3	.00	ICB

(C) Optional Rate Plan Term Discounts on Channel Termination and Channel Mileage Rates (N)

DS1 & DS3 Services	Percentage
36 Months	10%
60 Months	20% (N)

(Continued)

ACCESS SERVICE

10. Rates and Charges (Cont'd)

10.9 Fremont Telcom Co. (Cont'd)

10.9.3 Miscellaneous Services

	Basic Time, Scheduled Working Hours	Overtime, Outside Scheduled Working Hours
(A) Additional Engineering Periods		
Per Engineering, 1/2 hour or fraction thereof	$50.00	$75.00
(B) Additional Labor		
Per Technician, 1/2 hour or fraction thereof	50.00	75.00
(C) Maintenance of Service		
Per Technician, 1/2 hour or fraction thereof	50.00	75.00
(D) Programming Service		
Per Programmer, 1/2 hour or fraction thereof	50.00	75.00

(Continued)

ACCESS SERVICE

10. Rates and Charges (Cont'd)

10.9 Fremont Telcom Co. (Cont'd)

10.9.3 Miscellaneous Services (Cont'd)

	Non-Recurring Charges	
(E) Intrastate IntraLATA Primary Interexchange Carrier (LPIC) Change Charge:		(C)
Per Occurrence, Per Line:		
(1) Manually Processed	$5.50	
(2) Electronically Processed	1.25	
(3) PIC & LPIC for same carrier, same transaction:		
(a) Manually Processed	2.75	
(b) Electronically Processed	.62	(C)
		(D)
		(D)
(F) SS7 Signaling Conversion		
Per DS1	N/C	
(G) Access Order Charge	See Section 4	
(H) Service Date Change Charge	See Section 4.5.1	

Rate (E) was changed in compliance with Order No. 29806.

(Continued)

ACCESS SERVICE

10. Rates and Charges (Cont'd)

10.10 Inland Telephone Company

10.10.1 Switched Access Service

	Nonrecurring Charges	Monthly Rate	
(A) Nonrecurring Charges			
Per Line Connected	$290.13		
(B) Local Transport* (Per Access Minute)			
Premium Access - Originating		$0.01869	
Premium Access – Terminating:			
(1) Tandem Switched Transport			
(a) Tandem Switched Facility, Per Terminating Access Minute, Per Mile		$0.00043	(I)
(b) Tandem Switched Termination, Per Terminating Access Minute, Per Termination		$0.002234	(I)

* The Local Transport rate includes non-chargeable Interface Groups and Optional Features as set forth in Section 5.

(Continued)

ACCESS SERVICE

10. Rates and Charges (Cont'd)

10.10 Inland Telephone Company (Cont'd)

10.10.1 Switched Access Service (Cont'd)

(B) Local Transport, Premium Rates (Cont'd)

(2) Flat Rates – Switched Access Local Transport

(a) Direct Trunked Transport

	Monthly Rate	
(i) Direct Trunked Facility, Per Mile		
Voice Grade – Two & Four Wire	$ 2.98	(I)
High Capacity DS1	$ 13.99	
High Capacity DS3	$ 121.91	
(ii) Direct Trunked Termination, Per Termination		
Voice Grade – Two & Four Wire	$ 30.00	
High Capacity DS1	$ 72.61	
High Capacity DS3	$ 466.26	
(iii) Multiplexing, Per Arrangement		
DS3 to DS1	$ 425.43	
DS1 to Voice	$ 164.24	(I)

(Continued)

ACCESS SERVICE

10. Rates and Charges (Cont'd)

10.10 Inland Telephone Company (Cont'd)

10.10.1 Switched Access Service (Cont'd)

	Monthly Rate	
(C) End Office Charges		
Local Switching Originating, Per Access Minute:		
Premium Access LS1 (FGA and FGB)	$0.01869	
Premium Access LS2 (FGC and FGD)	$0.01869	
Local Switching Terminating:		
(1) Premium Access: Per Terminating Access Minute:*		
- Effective 7-1-2015	$ 0.018465	(C)(R)

* The composite Terminating Local Switching rate shown above include the Terminating Information Surcharge rate element.

(Continued)

ACCESS SERVICE

10. Rates and Charges (Cont'd)

10.10 Inland Telephone Company (Cont'd)

10.10.1 Switched Access Service (Cont'd)

	Monthly Rate	
(C) End Office Charges (Cont'd)		
(2) Information Surcharge Terminating, Combined in rates 10.10.1(C)(1)	$ 0.000000	(C) (C)
		(D) (D)
(D) 800 Data Base Access Service		
(1) Basic Rate, per query	$ 0.003500	
(2) Vertical Features Rate, per query (replaces basic rate)	$ 0.007165	
		(D) (D)

(Continued)

ACCESS SERVICE

10. Rates and Charges (Cont'd)

10.10 Inland Telephone Company (Cont'd)

10.10.1 Switched Access Service (Cont'd)

	Nonrecurring Charges	Per Access Minute
(E) Carrier Common Line Access Service		
(1) Per Originating Minute		$0.01000

(D)

10.10.2 Special Access Service

		Monthly Rates*
(A) Channel Termination		
(1) Voice Grade Channel Per Termination		
(a) Two-Wire	$223.24	$32.40
(b) Four-Wire	223.24	48.67
(2) Metallic Channel Per Termination		
Two-Wire	223.24	32.40

* The Channel Termination rate includes non-chargeable Channel Interfaces as set forth in 6.1.7.

(Continued)

ACCESS SERVICE

10. Rates and Charges (Cont'd)

10.10 Inland Telephone Company (Cont'd)

	Nonrecurring Charges	Monthly Rates*	Daily Rates
(A) Channel Termination (Cont'd)			
(3) Program Audio Per Termination	$121.00	$33.77	$3.38
(a) Optional Features and Functions			
(i) Bridging, Distribution Amplifier Per Port	.00	21.71	2.18
(ii) Gain Conditioning Per Service	.00	11.07	0.11
(iii) Stereo Per Service	.00	11.07	0.11
(4) Video Service Per Termination	223.24	425.40	233.97

* The Channel Termination rate includes non-chargeable Channel Interfaces as set forth in 6.1.7.

(Continued)

ACCESS SERVICE

10. Rates and Charges (Cont'd)

10.10 Inland Telephone Company (Cont'd)

10.10.2 Special Access Service (Cont'd)

	Nonrecurring Charges	Monthly Rates*
(A) Channel Termination (Cont'd)		
(5) Digital Data Service Per Termination	$223.24	ICB
(a) Optional Features and Functions		
(i) Central Office Bridging Per Port	.00	$3.37
(ii) Loop Transfer Arrangement Per Four Port Arrangement	.00	6.75
(iii) Public Packet Switching Network Interface Arrangement	.00	18.21
(b) Channel Service Unit Per Termination	.00	18.60

* The Channel Termination rate includes non-chargeable Channel Interfaces as set forth in 6.1.7.

(Continued)

ACCESS SERVICE

10. Rates and Charges (Cont'd)

10.10 Inland Telephone Company (Cont'd)

10.10.2 Special Access Service (Cont'd)

	Nonrecurring Charges	Monthly Rates*
(A) Channel Termination (Cont'd)		
(6) High Capacity (DS1) Service Per Termination	$223.24	ICB
(a) Optional Features and Functions		
(i) Central Office Multiplexing, Per Arrangement	.00	$182.44
(ii) Automatic Loop Transfer, Per Arrangement	.00	440.13
(iii) Transfer Arrangement Per Four Port Arrangement, Including Control Channel Termination	.00	187.03

* The Channel Termination rate includes non-chargeable Channel Interfaces as set forth in 6.1.7.

(Continued)

ACCESS SERVICE

10. Rates and Charges (Cont'd)

10.10 Inland Telephone Company (Cont'd)

10.10.2 Special Access Service (Cont'd)

	Nonrecurring Charges	Monthly Rates**	Daily Rates
(A) Channel Termination (Cont'd)			
(7) High Capacity (DS3) Service Per Termination	$223.24	ICB	$.00
(B) Channel Mileage, Per Mile			
(1) Applies to Voice Grade, Metallic Channel, Program Audio, and Video Service	.00	$46.26	4.03*
(2) Digital Data Service***	.00	ICB	.00
(3) High Capacity Service			
(a) DS1	.00	ICB	.00
(b) DS3	.00	ICB	.00

* Applies only to Program Audio and Video Services.

** The Channel Termination rate includes non-chargeable Channel Interfaces as set forth in 6.1.7.

*** Digital Data is provided at the same rate for the following speeds: 2.4, 4.8, 9.6, 19.2, 56.0, and 64.0 Kbps. Speeds are limited by technological capacity of end office switches. All speeds are not available in all end offices.

(Continued)

ACCESS SERVICE

10. Rates and Charges (Cont'd)

10.10 Inland Telephone Company (Cont'd)

10.10.2 Special Access Service (Cont'd)

	Nonrecurring Charges	Monthly Rates
(C) Bridging		
Per Port	$.00	$6.50

10.10.3 Miscellaneous Services

	Basic Time, Scheduled Working Hours	Overtime, Outside Scheduled Working Hours
(A) Additional Engineering Periods		
Per Engineering, 1/2 hour or fraction thereof	$17.50	$24.50
(B) Additional Labor		
Per Technician, 1/2 hour or fraction thereof	17.50	24.50
(C) Maintenance of Service		
Per Technician, 1/2 hour or fraction thereof	17.50	24.50

(Continued)

ACCESS SERVICE

10. Rates and Charges (Cont'd) (N)

10.10 Inland Telephone Company (Cont'd)

10.10.3 Miscellaneous Services (Cont'd) (N)

	Basic Time, Scheduled Working Hours	Overtime, Outside Scheduled Working Hour	
(D) Programming Service			(M)
Per Programmer, 1/2 hour or fraction thereof	$30.00	$45.00	(M)

	Non-Recurring Charges	
		(N)
		(N)
(E) Intrastate IntraLATA Primary Interexchange Carrier (LPIC) Change Charge:		(C) (M)
Per Occurrence, Per Line:		
(1) Manually Processed	$5.50	
(2) Electronically Processed	1.25	
(3) PIC & LPIC for same carrier, same transaction:		
(a) Manually Processed	2.75	
(b) Electronically Processed	.62	(C)(M)

(M) Material previously shown on Sheet Number 364. Rate (E) was changed in compliance with Order No. 29806.

(Continued) (N)

ACCESS SERVICE

10. Rates and Charges (Cont'd)

10.10 Inland Telephone Company (Cont'd)

10.10.3 Miscellaneous Services (Cont'd)

(M)

(M)

		Non-Recurring Charges	(T)
(F)	SS7 Signaling Conversion		
	Per DS1	N/C	
(G)	Access Order Charge	See Section 4	
(H)	Service Date Change Charge	See Section 4.5.1	

(M) Material now shown on Sheet Number 363.1.

(Continued)

ACCESS SERVICE

10. Rates and Charges (Cont'd)

10.10.1 Midvale Telephone Company

10.10.1.1 Switched Access Service

		Nonrecurring Charges	Per Access Minute	
(A)	Nonrecurring Charges			
	Per Line Connected	$190.13		
(B)	Local Transport* (Per Access Minute)			
	Premium Access – Originating		$0.020	
	Premium Access – Terminating:			
	(1) Tandem Switched Transport			
	(a) Tandem Switched Facility, Per Terminating Access Minute, Per Mile		$0.00043	(I)
	(b) Tandem Switched Termination, Per Terminating Access Minute, Per Termination		$0.002234	(I)

* The Local Transport rate includes non-chargeable Interface Groups and Optional Features as set forth in Section 5.

(Continued)

ACCESS SERVICE

10. Rates and Charges (Cont'd)

10.10.1 Midvale Telephone Company (Cont'd)

10.10.1.1 Switched Access Service (Cont'd)

(B) Local Transport (Cont'd)

(2) Flat Rates – Switched Access Local Transport

(a) Direct Trunked Transport

	Monthly Rate	
(i) Direct Trunked Facility, Per Mile		
Voice Grade – Two & Four Wire	$ 5.80	(I)
High Capacity DS1	$ 27.22	
High Capacity DS3	$ 237.10	
(ii) Direct Trunked Termination, Per Termination		
Voice Grade – Two & Four Wire	$ 58.34	
High Capacity DS1	$ 141.22	
High Capacity DS3	$ 906.84	
(iii) Multiplexing, Per Arrangement		
DS3 to DS1	$ 827.39	
DS1 to Voice	$ 319.45	(I)

(Continued)

ACCESS SERVICE

10. Rates and Charges (Cont'd)

10.10.1 Midvale Telephone Company (Cont'd)

10.10.1.1 Switched Access Service (Cont'd)

	Monthly Rate	
(C) End Office Charges		
Local Switching Originating, Per Access Minute:		
Premium Access LS1 (FGA and FGB)	$0.020	
Premium Access LS2 (FGC and FGD)	$0.020	
Local Switching Terminating:		
(1) Premium Access: Per Terminating Access Minute:*		
- Effective 7-2-2015	$ 0.018465	(C)(R)

* The composite Terminating Local Switching rate shown above include the Terminating Information Surcharge rate element.

(Continued)

ACCESS SERVICE

10. Rates and Charges (Cont'd)

10.10.1 Midvale Telephone Company (Cont'd)

10.10.1.1 Switched Access Service (Cont'd)

	Monthly Rate	
(C) End Office Charges (Cont'd)		
(2) Information Surcharge Terminating, Combined in rates 10.10.1.1(C)(1)	$ 0.000000	(C) (C)
		(D) (D)
(D) 800 Data Base Access Service		
(1) Basic Rate, per query	$ 0.0035	
(2) Vertical Features Rate, per query (replaces basic rate)	$ 0.007165	
		(D) (D)

(Continued)

ACCESS SERVICE

10. Rates and Charges (Cont'd)

10.10.1 Midvale Telephone Exchange, Inc. (Cont'd)

10.10.1.1 Switched Access Service (Cont'd)

	Nonrecurring Charges	Per Access Minute
(E) Carrier Common Line Access Service		
(1) Per Originating Minute		$0.01400

(D)

10.10.1.2 Special Access Service

		Monthly Rates*
(A) Channel Termination		
(1) Voice Grade Channel Per Termination		
(a) Two-Wire	$223.24	$58.05
(b) Four-Wire	223.24	92.89
(2) Metallic Channel Per Termination		
Two-Wire	223.24	58.05

* The Channel Termination rate includes non-chargeable Channel Interfaces as set forth in 6.1.7.

(Continued)

ACCESS SERVICE

10. Rates and Charges (Cont'd) (N)

10.10.1 Midvale Telephone Exchange, Inc. (Cont'd)

10.10.1.2 Special Access Service (Cont'd)

	Nonrecurring Charges	Monthly Rates*	Daily Rates
(A) Channel Termination (Cont'd)			
(3) Program Audio Per Termination	$121.00	$33.77	$3.38
(a) Optional Features and Functions			
(i) Bridging, Distribution Amplifier Per Port	.00	21.71	2.18
(ii) Gain Conditioning Per Service	.00	11.07	0.11
(iii) Stereo Per Service	.00	11.07	0.11
(4) Video Service Per Termination	223.24	425.40	233.97

* The Channel Termination rate includes non-chargeable Channel Interfaces as set forth in 6.1.7.

(Continued) (N)

ACCESS SERVICE

10. Rates and Charges (Cont'd) (N)

10.10.1 Midvale Telephone Exchange, Inc. (Cont'd)

10.10.1.2 Special Access Service (Cont'd)

	Nonrecurring Charges	Monthly Rates*
(A) Channel Termination (Cont'd)		
(5) Digital Data Service Per Termination	$223.24	ICB
(a) Optional Features and Functions		
(i) Central Office Bridging Per Port	.00	$3.37
(ii) Loop Transfer Arrangement Per Four Port Arrangement	.00	6.75
(iii) Public Packet Switching Network Interface Arrangement	.00	18.21
(b) Channel Service Unit Per Termination	.00	18.60

* The Channel Termination rate includes non-chargeable Channel Interfaces as set forth in 6.1.7.

(Continued) (N)

ACCESS SERVICE

10. Rates and Charges (Cont'd) (N)

10.10.1 Midvale Telephone Exchange, Inc. (Cont'd)

10.10.1.2 Special Access Service (Cont'd)

	Nonrecurring Charges	Monthly Rates*
(A) Channel Termination (Cont'd)		
(6) High Capacity (DS1) Service Per Termination	$223.24	ICB
(a) Optional Features and Functions		
(i) Central Office Multiplexing, Per Arrangement	.00	$182.44
(ii) Automatic Loop Transfer, Per Arrangement	.00	440.13
(iii) Transfer Arrangement Per Four Port Arrangement, Including Control Channel Termination	.00	187.03

* The Channel Termination rate includes non-chargeable Channel Interfaces as set forth in 6.1.7.

(Continued) (N)

ACCESS SERVICE

10. Rates and Charges (Cont'd) (N)

10.10.1 Midvale Telephone Exchange, Inc. (Cont'd)

10.10.1.2 Special Access Service (Cont'd)

	Nonrecurring Charges	Monthly Rates**	Daily Rates
(A) Channel Termination (Cont'd)			
(7) High Capacity (DS3) Service Per Termination	$223.24	ICB	$.00
(B) Channel Mileage, Per Mile			
(1) Applies to Voice Grade, Metallic Channel, Program Audio, and Video Service	.00	$78.46	7.85*
(2) Digital Data Service***	.00	ICB	.00
(3) High Capacity Service			
(a) DS1	.00	ICB	.00
(b) DS3	.00	ICB	.00
(C) Special Access Surcharge (See NECA Tariff F.C.C. No. 5, Section 17.3.1 for details)			
Per Voice Grade Equivalent	.00	25.00	.00

* Applies only to Program Audio and Video Services.

** The Channel Termination rate includes non-chargeable Channel Interfaces as set forth in 6.1.7.

*** Digital Data is provided at the same rate for the following speeds: 2.4, 4.8, 9.6, 19.2, 56.0, and 64.0 Kbps. Speeds are limited by technological capacity of end office switches. The Company currently offers 56.0.

(Continued) (N)

ACCESS SERVICE

10. Rates and Charges (Cont'd) (N)

10.10.1 Midvale Telephone Exchange, Inc. (Cont'd)

10.10.1.2 Special Access Service (Cont'd)

	Nonrecurring Charges	Monthly Rates
(D) Bridging		
Per Port	$.00	$6.50

10.10.1.3 Miscellaneous Services

	Basic Time, Scheduled Working Hours	Overtime, Outside Scheduled Working Hours
(A) Additional Engineering Periods		
Per Engineering, 1/2 hour or fraction thereof	$17.50	$24.50
(B) Additional Labor		
Per Technician, 1/2 hour or fraction thereof	17.50	24.50
(C) Maintenance of Service		
Per Technician, 1/2 hour or fraction thereof	17.50	24.50

(Continued) (N)

ACCESS SERVICE

10. Rates and Charges (Cont'd)

10.10.1 Midvale Telephone Exchange, Inc. (Cont'd)

10.10.1.3 Miscellaneous Services (Cont'd)

	Basic Time, Scheduled Working Hours	Overtime, Outside Scheduled Working Hours
(D) Programming Service		
Per Programmer, 1/2 hour or fraction thereof	$30.00	$45.00

	Non-Recurring Charges	
(E) Intrastate IntraLATA Primary Interexchange Carrier (LPIC) Change Charge:		(C)
Per Occurrence, Per Line:		
(1) Manually Processed	$5.50	
(2) Electronically Processed	1.25	
(3) PIC & LPIC for same carrier, same transaction:		
(a) Manually Processed	2.75	
(b) Electronically Processed	.62	(C)

(N)
(N)

Rate (E) was changed in compliance with Order No. 29806.

(Continued)

ACCESS SERVICE

10. Rates and Charges (Cont'd)

10.10.1 Midvale Telephone Exchange, Inc. (Cont'd)

10.10.1.3 Miscellaneous Services (Cont'd)

	Nonrecurring Charges	
(F) SS7 Signaling Conversion,		
Per DS1	N/C	
(G) Access Order Charge, Per Order (See Section 4)	$87.23	(R)
(H) Service Date Change Charge		
A Service Date Change Charge will apply, on a per order per occurrence basis, for each service date changed. The Access Order Charge as specified in 10.10.1.3(G) does not apply. Also see Section 4.5.1. Per Order	53.00	
(I) Design Change Charge		
The Design Change Charge will apply on a per order per occurrence basis, for each order requiring design change. (See NECA Tariff F.C.C. No. 5, Section 17.4.1(C) for details.) Per Order	53.00	

(Continued)

ACCESS SERVICE

10. Rates and Charges (Cont'd) (N)

10.10.1 Midvale Telephone Exchange, Inc. (Cont'd)

10.10.1.3 Miscellaneous Services (Cont'd)

		Nonrecurring Charges
(J)	Expedited Order Charge (See NECA Tariff F.C.C. No. 5, Section 5.1.2 for details)	ICB
(K)	Miscellaneous Service Order Charge, (See NECA Tariff F.C.C. No. 5, Section 17.4.1(D) for details)	
	Per Occurrence	$53.00
(L)	Additional Manual Testing – Switched Access (See NECA Tariff F.C.C. No. 5, Section 13.3.1 for details)	
	To First Point of Switching, Per Order	53.00
(M)	Additional Cooperative Acceptance Testing – Switched or Special Access (See NECA Tariff F.C.C. No. 5, Section 13.3.1 for details)	
	Per Order	53.00
(N)	Additional Manual Testing – Special Access (See NECA Tariff F.C.C. No. 5, Section 13.3.1 for details)	
	Per Order	53.00

(Continued) (N)

ACCESS SERVICE

10. Rates and Charges (Cont'd) (N)

10.10.1 Midvale Telephone Exchange, Inc. (Cont'd)

10.10.1.3 Miscellaneous Services (Cont'd)

	Rate Per Test
(O) Additional Automatic Testing – Switched (See NECA F.C.C. Tariff No. 5, Section 17.4.4(B) for details)	
(A) To First Point of Switching, Per Transmission Path	
(1) Gain-Slope	$2.89
(2) C-Notched Noise Tests	2.89
(3) 1004 Hz Loss	2.89
(4) C-Message Noise	2.89
(5) Balance (Return Loss)	2.89

(Continued) (N)

ACCESS SERVICE

10. Rates and Charges (Cont'd)

10.11 Mud Lake Telephone Cooperative Association, Inc.

10.11.1 Switched Access Service** (T)

		Nonrecurring Charges	Per Access Minute
(A)	Nonrecurring Charges		
	Per Line Connected	$290.13	
(B)	Local Transport* (1)		
	Premium Access		$0.0200
(C)	End Office (Local Switching) (1)		
	Premium Access LS1 (FGA and FGB)		0.0200
	Premium Access LS2 (FGC and FGD)		0.0200
(D)	800 Data Base Access Service		
	(1) Basic Rate, per query		0.003500
	(2) Vertical Features Rate, per query (replaces basic rate)		0.007165

* The Local Transport rate includes non-chargeable Interface Groups and Optional Features as set forth in Section 5.

** The rates will be updated at a later time. (N)

(1) These rates are discounted 40% for off-peak traffic as set forth in 5.7.5.

(Continued)

ACCESS SERVICE

10. Rates and Charges (Cont'd)

10.11 Mud Lake Telephone Cooperative Association, Inc. (Cont'd)

10.11.1 Switched Access Service ** (Cont'd) (T)

	Per Access Minute
(E) Carrier Common Line Access Service	
(1) Per Originating Minute	$0.06555
(2) Per Terminating Minute	0.06555

10.11.2 Special Access Service

	Nonrecurring Charges	Monthly Rates*
(A) Channel Termination		
(1) Voice Grade Channel Per Termination		
(a) Two-Wire	$223.24	$28.68
(b) Four-Wire	223.24	42.73
(2) Metallic Channel Per Termination		
Two-Wire	223.24	28.68

* The Channel Termination rate includes non-chargeable Channel Interfaces as set forth in 6.1.7.

** The rates will be updated at a later time. (N)

(Continued)

ACCESS SERVICE

10. Rates and Charges (Cont'd)

10.11 Mud Lake Telephone Cooperative Association, Inc. (Cont'd)

10.11.2 Special Access Service (Cont'd)

	Nonrecurring Charges	Monthly Rates*	Daily Rates
(A) Channel Termination (Cont'd)			
(3) Program Audio Per Termination	$121.00	$33.77	$3.38
(a) Optional Features and Functions			
(i) Bridging, Distribution Amplifier Per Port	.00	21.71	2.18
(ii) Gain Conditioning Per Service	.00	11.07	0.11
(iii) Stereo Per Service	.00	11.07	0.11
(4) Video Service Per Termination	223.24	425.40	233.97

* The Channel Termination rate includes non-chargeable Channel Interfaces as set forth in 6.1.7.

(Continued)

ACCESS SERVICE

10. Rates and Charges (Cont'd)

10.11 Mud Lake Telephone Cooperative Association, Inc. (Cont'd)

10.11.2 Special Access Service (Cont'd)

	Nonrecurring Charges	Monthly Rates*
(A) Channel Termination (Cont'd)		
(5) Digital Data Service Per Termination	$223.24	$53.06
(a) Optional Features and Functions		
(i) Central Office Bridging Per Port	.00	3.37
(ii) Loop Transfer Arrangement Per Four Port Arrangement	.00	6.75
(iii) Public Packet Switching Network Interface Arrangement	.00	18.21
(b) Channel Service Unit Per Termination	.00	18.60

* The Channel Termination rate includes non-chargeable Channel Interfaces as set forth in 6.1.7.

(Continued)

ACCESS SERVICE

10. Rates and Charges (Cont'd)

10.11 Mud Lake Telephone Cooperative Association, Inc. (Cont'd)

10.11.2 Special Access Service (Cont'd)

	Nonrecurring Charges	Monthly Rates*
(A) Channel Termination (Cont'd)		
(6) High Capacity (DS1) Service Per Termination	$223.24	$210.62
(a) Optional Features and Functions		
(i) Central Office Multiplexing, Per Arrangement	.00	182.44
(ii) Automatic Loop Transfer, Per Arrangement	.00	440.13
(iii) Transfer Arrangement Per Four Port Arrangement, Including Control Channel Termination	.00	187.03

* The Channel Termination rate includes non-chargeable Channel Interfaces as set forth in 6.1.7.

(Continued)

ACCESS SERVICE

10. Rates and Charges (Cont'd)

10.11 Mud Lake Telephone Cooperative Association, Inc. (Cont'd)

10.11.2 Special Access Service (Cont'd)

	Nonrecurring Charges	Monthly Rates	Daily Rates
(B) Channel Mileage, Per Mile			
(1) Applies to Voice Grade, Metallic Channel, Program Audio, and Video Service	$.00	$62.14	$6.21*
(2) Digital Data Service**	.00	122.00	.00
(3) High Capacity Service DS1	.00	380.89	.00

	Nonrecurring Charges	Monthly Rates
(C) Bridging		
Per Port	$.00	$6.50

* Applies only to Program Audio and Video Services.

** Digital Data is provided at the same rate for the following speeds: 2.4, 4.8, 9.6, 19.2, 56.0, and 64.0 Kbps. Speeds are limited by technological capacity of end office switches. All speeds are not available in all end offices.

(Continued)

ACCESS SERVICE

10. Rates and Charges (Cont'd)

10.11 Mud Lake Telephone Cooperative Association, Inc. (Cont'd)

10.11.3 Miscellaneous Services

		Basic Time, Scheduled Working Hours	Overtime, Outside Scheduled Working Hours
(A)	Additional Engineering Periods		
	Per Engineering, 1/2 hour or fraction thereof	$17.50	$24.50
(B)	Additional Labor		
	Per Technician, 1/2 hour or fraction thereof	17.50	24.50
(C)	Maintenance of Service		
	Per Technician, 1/2 hour or fraction thereof	17.50	24.50
(D)	Programming Service		
	Per Programmer, 1/2 hour or fraction thereof	30.00	45.00

(M)
(M)

(M) Material now shown on Sheet Number 372.

(Continued)

ACCESS SERVICE

10. Rates and Charges (Cont'd)

10.11 Mud Lake Telephone Cooperative Association, Inc. (Cont'd)

10.11.3 Miscellaneous Services (Cont'd)

		Non-Recurring Charges	(T)
(E)	Intrastate IntraLATA Primary Interexchange Carrier (LPIC) Change Charge:		(C)(M)
	Per Occurrence, Per Line:		
	(1) Manually Processed	$5.50	
	(2) Electronically Processed	1.25	
	(3) PIC & LPIC for same carrier, same transaction:		
	(a) Manually Processed	2.75	
	(b) Electronically Processed	.62	(C)(M)
(F)	SS7 Signaling Conversion		
	Per DS1	N/C	
(G)	Access Order Charge	See Section 4	
(H)	Service Date Change Charge	See Section 4.5.1	

(M) Material previously shown on Sheet Number 371. Rate (E) was changed in compliance with Order No. 29806.

(Continued)

ACCESS SERVICE

10. Rates and Charges (Cont'd)

10.12 Potlatch Telephone Company, Inc.

10.12.1 Switched Access Service

	Nonrecurring Charges	Monthly Rate	
(A) Nonrecurring Charges			
Per Line Connected	$290.13		
(B) Local Transport, Premium Rates			
(1) Entrance Facility Per Termination			
Voice Grade (2-Wire)	$ 474.14	$ 33.15	(I)
Voice Grade (4-Wire)	$ 474.14	$ 53.04	
High Capacity DS1	$ 347.70	$ 161.60	
High Capacity DS3	$ 468.87	$ 1,475.45	
(2) Direct Trunked Transport			
(a) Direct Trunked Facility, Per Mile			
Voice Grade (2 & 4 Wire)		$ 2.36	
High Capacity DS1		$ 11.08	
High Capacity DS3		$ 96.44	(I)

(Continued)

ACCESS SERVICE

10. Rates and Charges (Cont'd)

10.12 Potlatch Telephone Company, Inc. (Cont'd)

10.12.1 Switched Access Service (Cont'd)

	Monthly Rate	
(B) Local Transport, Premium Rates (Cont'd)		
(2) Direct Trunked Transport (Cont'd)		
(b) Direct Trunked Termination, Per Termination		
Voice Grade (2 & 4 Wire)	$ 23.72	(I)
High Capacity DS1	$ 57.44	
High Capacity DS3	$ 368.86	
(c) Multiplexing, Per Arrangement		
DS3 to DS1	$ 336.54	
DS1 to Voice	$ 129.93	(I)
(3) Tandem Switched Transport		
(a) Tandem Switched Facility, Per Access Minute, Per Mile		
- Originating	$ 0.000188	
- Terminating	$ 0.000198	(I)

(Continued)

ACCESS SERVICE

10. Rates and Charges (Cont'd)

10.12 Potlatch Telephone Company, Inc. (Cont'd)

10.12.1 Switched Access Service (Cont'd)

	Monthly Rate	
(B) Local Transport, Premium Rates (Cont'd)		
(3) Tandem Switched Transport (Cont'd)		
(b) Tandem Switched Termination, Per Access Minute, Per Termination		
- Originating	$ 0.000979	
- Terminating	$ 0.001032	(I)
(c) Tandem Switching, Per Access Minute, Per Tandem		
- Originating	$ 0.002468	
- Terminating	$ 0.002601	(I)
(4) Network Blocking, Per Blocked Call		
- Applied to FGD Only	$ 0.0153	

(Continued)

ACCESS SERVICE

10. Rates and Charges (Cont'd)

10.12 Potlatch Telephone Company, Inc. (Cont'd)

10.12.1 Switched Access Service (Cont'd)

	Monthly Rate	
(C) End Office, Premium Rates		
(1) Local Switching, Per Access Minute		
- Originating	$ 0.068413	(D)
- Terminating*		(D)
- Effective 7-1-2014	$ 0.011475	(C) (D) (D)

* The composite Terminating Local Switching rate shown above include the Terminating Information Surcharge rate element. (T) (T)

(Continued)

ACCESS SERVICE

10. Rates and Charges (Cont'd)

10.12 Potlatch Telephone Company, Inc. (Cont'd)

10.12.1 Switched Access Service (Cont'd)

	Monthly Rate	
(C) End Office, Premium Rates		
(2) Information Surcharge Terminating, Combined in rates 10.12.1(C)(1)	$ 0.000000	(C) (C) (D) (D)

(Continued)

ACCESS SERVICE

10. Rates and Charges (Cont'd)

10.12 Potlatch Telephone Company, Inc. (Cont'd)

10.12.1 Switched Access Service (Cont'd)

		Per Access Minute
(D)	800 Data Base Access Service	
	(1) Basic Rate, per query	$0.003500
	(2) Vertical Features Rate, per query (replaces basic rate)	0.007165
(E)		

(D)

(D)

(Continued)

ACCESS SERVICE

10. Rates and Charges (Cont'd)

10.12 Potlatch Telephone Company, Inc. (Cont'd)

10.12.2 Special Access Service

	Nonrecurring Charges	Monthly Rates*
(A) Channel Termination		
(1) Voice Grade Channel Per Termination		
(a) Two-Wire	$223.24	$31.15
(b) Four-Wire	223.24	46.67
(2) Metallic Channel Per Termination		
Two-Wire	223.24	31.15

	Nonrecurring Charges	Monthly Rates*	Daily Rates
(3) Program Audio Per Termination	$121.00	$33.77	$3.38

* The Channel Termination rate includes non-chargeable Channel Interfaces as set forth in 6.1.7.

(Continued)

ACCESS SERVICE

10. Rates and Charges (Cont'd)

10.12 Potlatch Telephone Company, Inc. (Cont'd)

10.12.2 Special Access Service (Cont'd)

	Nonrecurring Charges	Monthly Rates*	Daily Rates
(A) Channel Termination (Cont'd)			
(3) Program Audio Per Termination (Cont'd)			
(a) Optional Features and Functions			
(i) Bridging, Distribution Amplifier Per Port	$.00	$21.71	$2.18
(ii) Gain Conditioning Per Service	.00	11.07	0.11
(iii) Stereo Per Service	.00	11.07	0.11
(4) Video Service Per Termination	223.24	425.40	233.97

* The Channel Termination rate includes non-chargeable Channel Interfaces as set forth in 6.1.7.

(Continued)

ACCESS SERVICE

10. Rates and Charges (Cont'd)

10.12 Potlatch Telephone Company, Inc. (Cont'd)

10.12.2 Special Access Service (Cont'd)

	Nonrecurring Charges	Monthly Rates*	Daily Rates
(A) Channel Termination (Cont'd)			
(5) Digital Data Service Per Termination	$223.24	ICB	$.00
(a) Optional Features and Functions			
(i) Central Office Bridging Per Port	.00	$3.37	.00
(ii) Loop Transfer Arrangement Per Four Port Arrangement	.00	6.75	.00
(iii) Public Packet Switching Network Interface Arrangement	.00	18.21	.00
(b) Channel Service Unit Per Termination	.00	18.60	.00

* The Channel Termination rate includes non-chargeable Channel Interfaces as set forth in 6.1.7.

(Continued)

ACCESS SERVICE

10. Rates and Charges (Cont'd)

10.12 Potlatch Telephone Company, Inc. (Cont'd)

10.12.2 Special Access Service (Cont'd)

	Nonrecurring Charges	Monthly Rates*
(A) Channel Termination (Cont'd)		
(6) High Capacity (DS1) Service Per Termination	$223.24	ICB
(a) Optional Features and Functions		
(i) Central Office Multiplexing, Per Arrangement	.00	$182.44
(ii) Automatic Loop Transfer, Per Arrangement	.00	440.13
(iii) Transfer Arrangement Per Four Port Arrangement, Including Control Channel Termination	.00	187.03
(7) High Capacity (DS3) Service Per Termination	223.24	ICB

* The Channel Termination rate includes non-chargeable Channel Interfaces as set forth in 6.1.7.

(Continued)

ACCESS SERVICE

10. Rates and Charges (Cont'd)

10.12 Potlatch Telephone Company, Inc. (Cont'd)

10.12.2 Special Access Service (Cont'd)

	Nonrecurring Charges	Monthly Rates	Daily Rates
(B) Channel Mileage, Per Mile			
(1) Applies to Voice Grade, Metallic Channel, Program Audio, and Video Service	$.00	$41.42	$4.14*
(2) Digital Data Service**	.00	ICB	.00
(3) High Capacity Service			
(a) DS1	.00	ICB	.00
(b) DS3	.00	ICB	.00

	Nonrecurring Charges	Monthly Rates
(C) Bridging		
Per Port	$.00	$6.50

* Applies only to Program Audio and Video Services.

** Digital Data is provided at the same rate for the following speeds: 2.4, 4.8, 9.6, 19.2, 56.0, and 64.0 Kbps. Speeds are limited by technological capacity of end office switches. All speeds are not available in all end offices.

(Continued)

ACCESS SERVICE

10. Rates and Charges (Cont'd)

10.12 Potlatch Telephone Company, Inc. (Cont'd)

10.12.3 Miscellaneous Services

		Basic Time, Scheduled Working Hours	Overtime, Outside Scheduled Working Hours
(A)	Additional Engineering Periods		
	Per Engineering, 1/2 hour or fraction thereof	$17.50	$24.50
(B)	Additional Labor		
	Per Technician, 1/2 hour or fraction thereof	17.50	24.50
(C)	Maintenance of Service		
	Per Technician, 1/2 hour or fraction thereof	17.50	24.50
(D)	Programming Service		
	Per Programmer, 1/2 hour or fraction thereof	30.00	45.00

(M)
(M)

(M) Material now shown on Sheet Number 381.

(Continued)

ACCESS SERVICE

10. Rates and Charges (Cont'd)

10.12 Potlatch Telephone Company, Inc. (Cont'd)

10.12.3 Miscellaneous Services (Cont'd)

		Non-Recurring Charges
(E)	Intrastate IntraLATA Primary Interexchange Carrier (LPIC) Change Charge:	
	Per Occurrence, Per Line:	
	(1) Manually Processed	$5.50
	(2) Electronically Processed	1.25
	(3) PIC & LPIC for same carrier, same transaction:	
	(a) Manually Processed	2.75
	(b) Electronically Processed	.62
(F)	SS7 Signaling Conversion	
	Per DS1	N/C
(G)	Access Order Charge	See Section 4
(H)	Service Date Change Charge	See Section 4.5.1
(I)	Late Payment Charge	See Section 2.4.1 (B)(4) (N)

(Continued)

ACCESS SERVICE

10. Rates and Charges (Cont'd)

10.13 Project Mutual Telephone Cooperative Association, Inc.

10.13.1 Switched Access Service

	Nonrecurring Charges	Monthly Rate	
(A) Nonrecurring Charges			
Per Line Connected	$290.13		
(B) Local Transport (Per Access Minute)			
Premium Access – Originating*		$0.005	
Premium Access – Terminating*:			
(1) Tandem Switched Transport			
(a) Tandem Switched Facility, Per Terminating Access Minute, Per Mile		$0.00043	(I)
(b) Tandem Switched Termination, Per Terminating Access Minute, Per Termination		$0.002234	(I)

* The Local Transport rate includes non-chargeable Interface Groups and Optional Features as set forth in Section 5.

(Continued)

ACCESS SERVICE

10. Rates and Charges (Cont'd)

10.13 Project Mutual Telephone Cooperative Association, Inc. (Cont'd)

10.13.1 Switched Access Service (Cont'd)

(B) Local Transport (Cont'd)

(2) Flat Rates – Switched Access Local Transport

(a) Direct Trunked Transport

	Monthly Rate	
(i) Direct Trunked Facility, Per Mile		
Voice Grade – Two & Four Wire	$ 3.35	(I)
High Capacity DS1	$ 15.69	
High Capacity DS3	$ 136.70	
(ii) Direct Trunked Termination, Per Termination		
Voice Grade – Two & Four Wire	$ 33.63	
High Capacity DS1	$ 81.42	
High Capacity DS3	$ 522.82	
(iii) Multiplexing, Per Arrangement		
DS3 to DS1	$ 477.02	
DS1 to Voice	$ 184.17	(I)

(Continued)

ACCESS SERVICE

10. Rates and Charges (Cont'd)

10.13 Project Mutual Telephone Cooperative Association, Inc. (Cont'd)

10.13.1 Switched Access Service (Cont'd)

	Monthly Rate	
(C) End Office Charges		
Local Switching Originating, Per Access Minute:		
Premium Access LS1 (FGA and FGB)	$ 0.0250	
Premium Access LS2 (FGC and FGD)	$ 0.0250	
Local Switching Terminating:		
(1) Premium Access: Per Terminating Access Minute:*		
- Effective 7-1-2015	$ 0.015472	(C)(R)

* The composite Terminating Local Switching rate shown above include the Terminating Information Surcharge rate element.

(Continued)

ACCESS SERVICE

10. Rates and Charges (Cont'd)

10.13 Project Mutual Telephone Cooperative Association, Inc. (Cont'd)

10.13.1 Switched Access Service (Cont'd)

	Monthly Rate	
(C) End Office Charges (Cont'd)		
(2) Information Surcharge Terminating, Combined in rates 10.13.1(C)(1)	$ 0.000000	(C) (C)
		(D) (D)
(D) 800 Data Base Access Service		
(1) Basic Rate, per query	$0.003500	
(2) Vertical Features Rate, per query (replaces basic rate)	$0.007165	(D) (D)

(Continued)

ACCESS SERVICE

10. Rates and Charges (Cont'd)

10.13 Project Mutual Telephone Cooperative Association, Inc. (Cont'd)

10.13.1 Switched Access Service (Cont'd)

	Nonrecurring Charges	Per Access Minute	
(E) Carrier Common Line Access Service			
(1) Per Originating Minute		$0.0564	(D) (D)

10.13.2 Special Access Service

		Monthly Rates*	
(A) Channel Termination			(T)
(1) Voice Grade Channel Per Termination			
(a) Two-Wire	$ 223.24	$36.34	(T)
(b) Four-Wire	223.24	58.14	

(D)
(D)

* The Channel Termination rate includes non-chargeable Channel Interfaces as set forth in 6.1.7. (T)

(Continued)

ACCESS SERVICE

10. Rates and Charges (Cont'd)

10.13 Project Mutual Telephone Cooperative Association, Inc. (Cont'd)

10.13.2 Special Access Service (Cont'd)

	Nonrecurring Charges	Monthly Rates*
(A) Channel Termination (Cont'd)		
(2) Metallic Channel Per Termination		
Two-Wire	$223.24	$36.34

	Nonrecurring Charges	Monthly Rates*	Daily Rates
(3) Program Audio Per Termination	$121.00	$58.14	$5.81
(a) Optional Features and Functions			
(i) Bridging, Distribution Amplifier Per Port	.00	21.71	2.18
(ii) Gain Conditioning Per Service	.00	11.07	0.11
(iii) Stereo Per Service	.00	20.12	0.26

* The Channel Termination rate includes non-chargeable Channel Interfaces as set forth in 6.1.7.

(Continued)

ACCESS SERVICE

10. Rates and Charges (Cont'd)

10.13 Project Mutual Telephone Cooperative Association, Inc. (Cont'd)

10.13.2 Special Access Service (Cont'd)

	Nonrecurring Charges	Monthly Rates*	Daily Rates
(A) Channel Termination (Cont'd)			
(4) Video Service Per Termination	$223.24	$425.40	$233.97
(5) Digital Data Service Per Termination	223.24	67.23	.00
(a) Optional Features and Functions			
(i) Central Office Bridging Per Port	.00	3.37	.00
(ii) Loop Transfer Arrangement Per Four Port Arrangement	.00	6.75	.00
(iii) Public Packet Switching Network Interface Arrangement	.00	18.21	.00

* The Channel Termination rate includes non-chargeable Channel Interfaces as set forth in 6.1.7.

(Continued)

ACCESS SERVICE

10. Rates and Charges (Cont'd)

10.13 Project Mutual Telephone Cooperative Association, Inc. (Cont'd)

10.13.2 Special Access Service (Cont'd)

	Nonrecurring Charges	Monthly Rates*
(A) Channel Termination (Cont'd)		
(5) Digital Data Service Per Termination (Cont'd)		
(b) Channel Service Unit Per Termination	$.00	$18.60
(6) High Capacity (DS1) Service Per Termination	223.24	189.01
(a) Optional Features and Functions		
(i) Central Office Multiplexing, Per Arrangement	.00	182.44
(ii) Automatic Loop Transfer, Per Arrangement	.00	440.13
(iii) Transfer Arrangement Per Four Port Arrangement, Including Control Channel Termination	.00	187.03

* The Channel Termination rate includes non-chargeable Channel Interfaces as set forth in 6.1.7.

(Continued)

ACCESS SERVICE

10. Rates and Charges (Cont'd)

10.13 Project Mutual Telephone Cooperative Association, Inc. (Cont'd)

10.13.2 Special Access Service (Cont'd)

	Nonrecurring Charges	Monthly Rates**	Daily Rates
(A) Channel Termination (Cont'd)			
(7) High Capacity (DS3) Service Per Termination	$223.24	ICB	$.00
(B) Channel Mileage, Per Mile			
(1) Applies to Voice Grade, Metallic Channel, Program Audio, and Video Service	.00	$63.26	6.33*
(2) Digital Data Service***	.00	63.26	.00
(3) High Capacity Service			
(a) DS1	.00	397.27	.00
(b) DS3	.00	ICB	.00

* Applies only to Program Audio and Video Services.

** The Channel Termination rate includes non-chargeable Channel Interfaces as set forth in 6.1.7.

*** Digital Data is provided at the same rate for the following speeds: 2.4, 4.8, 9.6, 19.2, 56.0, and 64.0 Kbps. Speeds are limited by technological capacity of end office switches. All speeds are not available in all end offices.

(Continued)

ACCESS SERVICE

10. Rates and Charges (Cont'd)

10.13 Project Mutual Telephone Cooperative Association, Inc. (Cont'd)

10.13.2 Special Access Service (Cont'd)

	Nonrecurring Charges	Monthly Rates
(C) Bridging		
Per Port	$.00	$6.50

10.13.3 Miscellaneous Services

	Basic Time, Scheduled Working Hours	Overtime, Outside Scheduled Working Hours
(A) Additional Engineering Periods		
Per Engineering, 1/2 hour or fraction thereof	$17.50	$24.50
(B) Additional Labor		
Per Technician, 1/2 hour or fraction thereof	17.50	24.50
(C) Maintenance of Service		
Per Technician, 1/2 hour or fraction thereof	17.50	24.50

(Continued)

ACCESS SERVICE

10. Rates and Charges (Cont'd)

10.13 Project Mutual Telephone Cooperative Association, Inc. (Cont'd)

10.13.3 Miscellaneous Services (Cont'd)

		Basic Time, Scheduled Working Hours	Overtime, Outside Scheduled Working Hours	
(D)	Programming Service			
	Per Programmer, 1/2 hour or fraction thereof	$30.00	$45.00	
			Non-Recurring Charges	(T)
(E)	Intrastate IntraLATA Primary Interexchange Carrier (LPIC) Change Charge:			(C)
	Per Occurrence, Per Line:			
	(1) Manually Processed		$5.50	
	(2) Electronically Processed		1.25	
	(3) PIC & LPIC for same carrier, same transaction:			
	(a) Manually Processed		2.75	
	(b) Electronically Processed		.62	(C)
				(M)
				(M)

(M) Material now shown on Sheet Number 389.1. Rate (E) was changed in compliance with Order No. 29806.

(Continued)

ACCESS SERVICE

10. Rates and Charges (Cont'd) (N)

10.13 Project Mutual Telephone Cooperative Association, Inc. (Cont'd)

10.13.3 Miscellaneous Services (Cont'd)

		Non-Recurring Charges	
			(N)
(F)	SS7 Signaling Conversion		(M)
	Per DS1	N/C	
(G)	Access Order Charge	See Section 4	
(H)	Service Date Change Charge	See Section 4.5.1	(M)

(M) Material previously shown on Sheet Number 389.

(Continued) (N)

ACCESS SERVICE

10. Rates and Charges (Cont'd)

10.14 Rural Telephone Company

10.14.1 Switched Access Service

		Nonrecurring Charges	Monthly Rate	
(A)	Nonrecurring Charges			
	Per Line Connected	$290.13		
(B)	Local Transport (Per Access Minute)			
	Premium Access – Originating*		$0.01719	
	Premium Access – Terminating*:			
	(1) Tandem Switched Transport			
	(a) Tandem Switched Facility, Per Terminating Access Minute, Per Mile		$0.000430	(I)
	(b) Tandem Switched Termination, Per Terminating Access Minute, Per Termination		$0.002234	(I)

* The Local Transport rate includes non-chargeable Interface Groups and Optional Features as set forth in Section 5.

(Continued)

ACCESS SERVICE

10. Rates and Charges (Cont'd)

10.14 Rural Telephone Company (Cont'd)

10.14.1 Switched Access Service (Cont'd)

(B) Local Transport (Cont'd)

(2) Flat Rates – Switched Access Local Transport

(a) Direct Trunked Transport

	Monthly Rate	
(i) Direct Trunked Facility, Per Mile		
Voice Grade – Two & Four Wire	$ 5.80	(I)
High Capacity DS1	$ 27.22	
High Capacity DS3	$ 237.10	
(ii) Direct Trunked Termination, Per Termination		
Voice Grade – Two & Four Wire	$ 58.34	
High Capacity DS1	$ 141.22	
High Capacity DS3	$ 906.84	
(iii) Multiplexing, Per Arrangement		
DS3 to DS1	$ 827.39	
DS1 to Voice	$ 319.45	(I)

(Continued)

ACCESS SERVICE

10. Rates and Charges (Cont'd)

10.14 Rural Telephone Company (Cont'd)

10.14.1 Switched Access Service (Cont'd)

	Monthly Rate	
(C) End Office Charges		
Local Switching Originating, Per Access Minute:		
Premium Access LS1 (FGA and FGB)	$ 0.01719	
Premium Access LS2 (FGC and FGD)	$ 0.01719	
Local Switching Terminating:		
(1) Premium Access: Per Terminating Access Minute:*		
- Effective 7-1-2015	$ 0.018465	(C)(R)

* The composite Terminating Local Switching rate shown above include the Terminating Information Surcharge rate element.

(Continued)

ACCESS SERVICE

10. Rates and Charges (Cont'd)

10.14 Rural Telephone Company (Cont'd)

10.14.1 Switched Access Service (Cont'd)

	Monthly Rate	
(C) End Office Charges (Cont'd)		
(2) Information Surcharge Terminating, Combined in rates 10.14.1(C)(1)	$ 0.000000	(C) (C)
		(D) (D)
(D) 800 Data Base Access Service		
(1) Basic Rate, per query	$ 0.003500	
(2) Vertical Features Rate, per query (replaces basic rate)	$ 0.007165	
		(D) (D)

(Continued)

ACCESS SERVICE

10. Rates and Charges (Cont'd)

10.14 Rural Telephone Company (Cont'd)

10.14.1 Switched Access Service (Cont'd) (N)

(E) Carrier Common Line Access Service (M)

(1) Per Originating Minute $ 0.01000 (T)(M)
(D)

10.14.2 Special Access Service

	Nonrecurring Charges	Monthly Rates*
(A) Channel Termination		
(1) Voice Grade Channel Per Termination		
(a) Two-Wire	$223.24	$62.55
(b) Four-Wire	223.24	100.09
(2) Metallic Channel Per Termination		
Two-Wire	223.24	62.55

	Nonrecurring Charges	Monthly Rates*	Daily Rates
(3) Program Audio Per Termination	$121.00	$33.77	$3.38

* The Channel Termination rate includes non-chargeable Channel Interfaces as set forth in 6.1.7.

(M) Rates 10.14.1 (E) previously shown on Original Sheet Number 390.

(Continued)

ACCESS SERVICE

10. Rates and Charges (Cont'd)

10.14 Rural Telephone Company (Cont'd)

10.14.2 Special Access Service (Cont'd)

	Nonrecurring Charges	Monthly Rates*	Daily Rates
(A) Channel Termination (Cont'd)			
(3) Program Audio Per Termination (Cont'd)			
(a) Optional Features and Functions			
(i) Bridging, Distribution Amplifier Per Port	$.00	$21.71	$2.18
(ii) Gain Conditioning Per Service	.00	11.07	0.11
(iii) Stereo Per Service	.00	11.07	0.11
(4) Video Service Per Termination	223.24	425.40	233.97

* The Channel Termination rate includes non-chargeable Channel Interfaces as set forth in 6.1.7.

(Continued)

ACCESS SERVICE

10. Rates and Charges (Cont'd)

10.14 Rural Telephone Company (Cont'd)

10.14.2 Special Access Service (Cont'd)

	Nonrecurring Charges	Monthly Rates*
(A) Channel Termination (Cont'd)		
(5) Digital Data Service Per Termination	$223.24	ICB
(a) Optional Features and Functions		
(i) Central Office Bridging Per Port	.00	$3.37
(ii) Loop Transfer Arrangement Per Four Port Arrangement	.00	6.75
(iii) Public Packet Switching Network Interface Arrangement	.00	18.21
(b) Channel Service Unit Per Termination	.00	18.60

* The Channel Termination rate includes non-chargeable Channel Interfaces as set forth in 6.1.7.

(Continued)

ACCESS SERVICE

10. Rates and Charges (Cont'd)

10.14 Rural Telephone Company (Cont'd)

10.14.2 Special Access Service (Cont'd)

	Nonrecurring Charges	Monthly Rates*
(A) Channel Termination (Cont'd)		
(6) High Capacity (DS1) Service Per Termination	$223.24	ICB
(a) Optional Features and Functions		
(i) Central Office Multiplexing, Per Arrangement	.00	$182.44
(ii) Automatic Loop Transfer, Per Arrangement	.00	440.13
(iii) Transfer Arrangement Per Four Port Arrangement, Including Control Channel Termination	.00	187.03

* The Channel Termination rate includes non-chargeable Channel Interfaces as set forth in 6.1.7.

(Continued)

ACCESS SERVICE

10. Rates and Charges (Cont'd)

10.14 Rural Telephone Company (Cont'd)

10.14.2 Special Access Service (Cont'd)

	Nonrecurring Charges	Monthly Rates**	Daily Rates
(A) Channel Termination (Cont'd)			
(7) High Capacity (DS3) Service Per Termination	$223.24	ICB	$.00
(B) Channel Mileage, Per Mile			
(1) Applies to Voice Grade, Metallic Channel, Program Audio, and Video Service	.00	$78.46	7.85*
(2) Digital Data Service***	.00	ICB	.00
(3) High Capacity Service			
(a) DS1	.00	ICB	.00
(b) DS3	.00	ICB	.00

* Applies only to Program Audio and Video Services.

** The Channel Termination rate includes non-chargeable Channel Interfaces as set forth in 6.1.7.

*** Digital Data is provided at the same rate for the following speeds: 2.4, 4.8, 9.6, 19.2, 56.0, and 64.0 Kbps. Speeds are limited by technological capacity of end office switches. All speeds are not available in all end offices.

(Continued)

ACCESS SERVICE

10. Rates and Charges (Cont'd)

10.14 Rural Telephone Company (Cont'd)

10.14.2 Special Access Service (Cont'd)

	Nonrecurring Charges	Monthly Rates
(C) Bridging		
Per Port	$.00	$6.50

10.14.3 Miscellaneous Services

	Basic Time, Scheduled Working Hours	Overtime, Outside Scheduled Working Hours
(A) Additional Engineering Periods		
Per Engineering, 1/2 hour or fraction thereof	$17.50	$24.50
(B) Additional Labor		
Per Technician, 1/2 hour or fraction thereof	17.50	24.50
(C) Maintenance of Service		
Per Technician, 1/2 hour or fraction thereof	17.50	24.50

(Continued)

ACCESS SERVICE

10. Rates and Charges (Cont'd)

10.14 Rural Telephone Company (Cont'd)

10.14.3 Miscellaneous Services (Cont'd)

	Basic Time, Scheduled Working Hours	Overtime, Outside Scheduled Working Hours	
(D) Programming Service			
Per Programmer, 1/2 hour or fraction thereof	$30.00	$45.00	
		Non-Recurring Charges	(T)
(E) Intrastate IntraLATA Primary Interexchange Carrier (LPIC) Change Charge:			(C)
Per Occurrence, Per Line:			
(1) Manually Processed		$5.50	
(2) Electronically Processed		1.25	
(3) PIC & LPIC for same carrier, same transaction:			
(a) Manually Processed		2.75	
(b) Electronically Processed		.62	(C)
			(M)
			(M)

(M) Material now shown on Sheet Number 397.1. Rate (E) was changed in compliance with Order No. 29806.

(Continued)

ACCESS SERVICE

10. Rates and Charges (Cont'd) (N)

10.14 Rural Telephone Company (Cont'd)

10.14.3 Miscellaneous Services (Cont'd)

		Non-Recurring Charges	
			(N)
(F)	SS7 Signaling Conversion		(M)
	Per DS1	N/C	
(G)	Access Order Charge	See Section 4	
(H)	Service Date Change Charge	See Section 4.5.1	(M)

(M) Material previously shown on Sheet Number 397.

(Continued) (N)

ACCESS SERVICE

(D)

(D)

ACCESS SERVICE

(D)

(D)

ACCESS SERVICE

(D)

(D)

ACCESS SERVICE

(D)

(D)

ACCESS SERVICE

(D)

(D)

ACCESS SERVICE

(D)

(D)

ACCESS SERVICE

(D)

(D)

ACCESS SERVICE

(D)

(D)

ACCESS SERVICE

(D)

(D)

ACCESS SERVICE

(D)

(D)

ACCESS SERVICE

(D)

(D)

ACCESS SERVICE

(D)

(D)

ACCESS SERVICE

(D)

(D)

ACCESS SERVICE

10. Rates and Charges (Cont'd)

10.16 Troy Telephone Company, Inc.

Reserved for future use. (T)