March 17, 2004

RECEIVED ☑
FILED ☐
2004 MAR 18 AM 10: 15
IDAHO PUBLIC
UTILITIES COMMISSION

verizon
17933 N.W. Evergreen Pkwy
P.O. Box 1100
Beaverton, OR 97076

Ms. Jean D. Jewell
Secretary
Idaho Public Utilities Commission
P.O. Box 83720
Boise, Idaho 83720-0074

Dear Ms. Jewell: VZN-T-04-02

Enclosed for filing with the Commission is the application of Verizon Northwest for a broadband tax credit for 2001. Verizon requests that the Commission find the Company eligible to receive an Idaho tax credit and that the broadband equipment installed in 2001 meets the definition of qualified broadband equipment as set out in Idaho Code 63-3029I(3)(b).

1. **Name and address of the applicant including a contact person in the event that there are questions regarding the application and its content.**
   Dean Randall, P.O. Box 1100, Beaverton, Oregon 97075-1100.
   Indicate whether the applicant is a telecommunications carrier, a commercial mobile service carrier , a cable or open video provider, a satellite carrier or other type of wireless carrier.
   Verizon Northwest is a telecommunications carrier.

2. **Identify the area or location where the equipment is installed in Idaho**. This equipment was installed during 2001 in the following Verizon exchanges in Idaho: Bayview, Bonners Ferry, Coeur d'Alene, Genesee, Hayden Lake, Kellogg, Moscow, Orofino, Pinehurst, Sandpoint, and St. Maries,

3. **Describe the type of broadband services offered to the public in Idaho**. The equipment installed in Idaho in 2001 is used to provide customers with DSL and high speed data (e.g., T-1) services.

4. **State the network transmission rate in bits per second at which the subscribers to the relevant broadband services can receive and send**. See the attached document which provides the network transmission rates for the broadband equipment installed during 2001.

5. **Provide a specific list of the equipment types that the application is requesting that the Commission determines is "qualified broadband equipment" as defined in Idaho Code 63-3029I(3)(b). List the brand, manufacturer, model numbers, and or other distinguishing features of the installed equipment.** See the attached work order description.

6. **Provide the dates and time periods that the broadband equipment was installed in Idaho.** See the attached work order description.

7. **Provide a written description (including the basic schematics or general drawings) of the relevant broadband network including a description of how the installed equipment is an "integral part" of the broadband network.** See the attached work order description and network diagrams.

8. **Quantify the percentage and number of potential Idaho customers that could be served with the Broadband equipment and the percentage and number of non-Idaho subscribers that will be/could be served by the broadband network.** See the attached worksheet containing the percentage and number of Idaho customers who could be served by broadband equipment in each exchange where broadband equipment was installed during 2001. No non-Idaho customers will be served by this broadband network.

9. **Enclose a statement certifying that the applicant has read the applicable statutes for broadband investment income tax credit and the applicant believes that the subject broadband equipment qualifies for the tax credit under Idaho Code 63-3029I.** See the attached statement.

If you have any question concerning this filing, please contact me at (503) 629-2285.

Sincerely,

Dean Randall

Dean Randall
Specialist - Regulatory

Idaho Broadband Certification

I hereby certify that representatives of Verizon Northwest Inc. (the applicant) have read the applicable statutes for broadband investment income tax credit and the applicant believes that the subject broadband equipment qualifies for the tax credit under Idaho Code 63-3029I.

Dean Randall

Dean Randall
Specialist – Regulatory

2001

State of Idaho Broadband Investment

The following list of Verizon work orders which in general provided Pair Gain equipment and/or plant investment and its associated installation labor. This equipment has the capability to allow the transmitting of signals rates of at least two hundred thousand (200,000) bits per second. The Pair Gain equipment can provide customers from DSL to T-1 type of service. It is an integral part of a network that permits broadband signaling to occur. The equipment placed on the listed work orders was all placed into service within the physical borders of the State of Idaho. The location is further defined on the list by the tariff named exchange of the LEC.

Location	Plant Loc. Code	Work Order	Work Order Description	Actual In-Svc	Summary TOTAL Dollars	Summary LABOR Dollars	Summary MATERIAL Dollars
Coeur d'Alene	1040-270	7T001AJ	ESTB PRGN - CUE E/W DISC*S LINES - RIVERSTONE ESA - NARRATIVE: THIS PROJECT PLACES A MARCONI DISC+S C-UE AT THE . RIVERSTONE ESA SITE. THE CABINET IS WIRED AND . EQUIPPED WITH 1344 LINES. THIS UNIT IS FIBER FED . AND EQUIPPED WITH AN FLM-150 WITH 28 DS1S. EQUIPMENT LOCATION & DSX ASSIGNMENTS	10/17/01	$ 293,343	$ 45,902	$ 255,645
Bayview	1090	3T001BA	ADD GODIGITAL GDSL8 SHELF AT BAYVIEW C.O.- PLACE ONE SHELF OF GODIGITAL "GDSL-8" EQUIPMENT IN THE BAYVIEW C.O. NEWPORT C.O. CLLI: BYVWIDXX REQUIRED GODIGITAL EQUIPMENT: C.O. SHELF: 19" P/N 587610 TIMING AND ALARM CARD: P/N 741582 6- GDSL-8 CHANNEL CARDS: P/N 741583	09/11/01	$ 10,568	$ 1,748	$ 11,071

EQUIP DESC	EQUIP PART #	EQUIP LOC B/S/P	DSX-1 B/PNL/JKS
FLM-150 OC-3	F989116	UE66H01R1.07/57	UE66H01R1.07/45/01-84
DISC+S COM SH	4100891L1	UE66H01R1.01/47	UE66H01R1.07/35/01-28
DISC+S COM SH	4100891L1	UE66H01R1.02/47	UE66H01R1.07/35/29-56
DDM PLUS SH	F989168	UE66H01R1.07/30	UE66H01R1.07/40/57-84

Location	Plant Loc. Code	Work Order	Work Order Description	Actual In-Svc	Summary TOTAL Dollars	Summary LABOR Dollars	Summary MATERIAL Dollars
Bayview	1091	3T001AL	ADD GODIGITAL GDSL8 SHELF AT ATHOL HUT- NARRATIVEADD GDSL-8 1 SH E/W 3 LINE CARDS EQUIPMENT LOCATION & DSX ASSIGNMENTS EQUIP DESC / EQUIP PART # / EQUIP LOC B/S/P / DSX-1 B/S/P / DSX-3 B/S/P ===== ====== ========= ===== ======= GDSL-8 990098 T-100/MS#22 N/A N/A	06/27/01	$ 7,093	$ 3,496	$ 5,303
Hayden Lk	1140-161	3T001CF	ADD LINES - HANLEY ESA - EQUIPMENT LOCATION & DSX ASSIGNMENTS EQUIP DESC / EQUIP PART # / EQUIP LOC B/S/P / DSX-1 B/S/P / DSX-3 B/S/P ===== ====== ========= ===== ======= 2W CARD NT4K65AB EAS HSG N/A N/A THIS WORK IS REQUIRED TO PROVIDE FACILITIES FOR TWO AREA IN THE FEED ROUTE SOUTH OF THE HAYDEN LAKE C.O.: CUMBERLAND MEADOWS, A 49-LOT SUBDIVISION ON THE SOUTHERN EXCHANGE BOUNDARY, OFF DALTON AND 17TH STREETS (24 CHANNELS FOR 12-18 MONTHS GROWTH); AND CENTER PARTNERS, A CALL CENTER/BUSINESS DEVELOPMENT NEAR PRAIRIE AND GOVERNMENT WAY (144 CHANNELS WILL BE USED TO CLEAR 150 PAIRS IN THE 4TH STREET FEED ROUTE, WHICH WILL IN TURN BE RE-ROUTED OVER TO CENTER PARTNERS).	09/25/01	$ 10,772	$ 3,391	$ 7,269

Location	Plant Loc. Code	Work Order	Work Order Description	Actual In-Svc	Summary TOTAL Dollars	Summary LABOR Dollars	Summary MATERIAL Dollars
Hayden Lk	1140	3T001CV	ADD F.O.T. - HAYDEN C.O. - PRAIRIE ESA - NARRATIVE ADD NTI OC-12 FOR PRAIRIE ESA EQUIPMENT LOCATION & DSX ASSIGNMENTS EQUIP DESC / EQUIP LOC B/S/P / DSX-1 B/S/P / DSX-3 B/S/P ===== / ========= / ===== / ======= NTI OC-12 METRO / RR-026/14 / N/A / RR-026/56/13-24 IN GENERAL, THIS PROJECT PROVIDES FOR PLACING A FIBER TERMINAL IN THE HAYDEN C.O., AS PART OF THE DEVELOPMENT OF THE PROPOSED PRAIRIE ESA SITE.	10/30/01	$ 29,847	$ 12,687	$ 36,466
Hayden Lk	1140-156	7T001AE	ESTB PRGN CABINET - MARCONI CUE - PRAIRIE ESA - EQUIPMENT LOCATION & DSX ASSIGNMENTS EQUIP DESC / EQUIP LOC B/S/P / DSX-1 B/S/P / DSX-3 B/S/P ===== / ========= / ===== / ======= NTI OC-12 METRO / R1.07/57 / N/A / R1.07/27/1-12 TAS 3000 / R1.06/04 / N/A / R1.07/27/24 THE C-UE WILL BE ORDERED AS A MARCONI "BASE UNIT", AND WILL BE EQUIPPED WITH POWER EQUIPMENT AND BATTERIES, FIBER DISTRIBUTION PANEL, 600 PROTECTORS, ONE EMPTY DISC#S RACK, WHICH WILL BE REMOVED, AND A DDM PLUS SHELF. A TOTAL ACCESS TA3000 SHELF WILL BE ADDED, ALONG WITH A NORTEL OC3/OC12 FIBER TERMINAL AND MISC CABLING.	10/30/01	$ 90,501	$ 48,035	$ 40,948

Location	Plant Loc. Code	Work Order	Work Order Description	Actual In-Svc	Summary TOTAL Dollars	Summary LABOR Dollars	Summary MATERIAL Dollars
Kellog	1170-133	3T001AW	ESTB DLC - DISC*S - SMELTERVILLE ESA - RMT. END - NARRATIVE: THIS PROJECT PROVIDES FOR ESTABLISHING THE REMOTE END OF THE PROPOSED SMELTERVILLE ESA SITE. THE EQUIPMENT WAS CHANGED FROM MARCONI MESA 4 TO A AFC UMC1000. EQUIPMENT LOCATION & DSX ASSIGNMENTS EQUIP DESC / EQUIP PART # / EQUIP LOC B/S/P ===== / ====== / ========= UMC1000 / 03200826 / AFC672H01R1 THIS DLC SHOULD BE A MESA 4 CABINET, WIRED FOR 672 AND E/W 400 POTS LINES.	09/13/01	$ 93,772	$ 14,218	$ 79,555
Orofino	1250	3T001BJ	REPL PRGN NEW HOPE ESA (UMC1000-120) UMC1000-240/120 - NARRATIVE: THIS PROJECT PLACES A UMC1000 LET WITH FOUR (4) CHANNEL BANK ASSEMBLIES TO ACCOMMODATE MOVING (3) SITES FROM THE EXISTING LET TO THE NEW LET. THIS WILL ENABLE CHANNEL ADDS TO REMAINING SITES EQUIPMENT LOCATION & DSX ASSIGNMENTS EQUIP DESC / EQUIP PART # / EQUIP LOC B/S/P / DSX-1 B/S/P ===== / ====== / ========= / ===== OTR / 90525000 / 203/55/6-9 / 203/B/31-34 TYPE EQUIP: (UMC1000 120 CAB) UMC1000 240 CAB TYPE FACILITY: COPPER EQUIPPED FACILITY CAPACITY: 2 T1'S TYPE HOUSING: UMC1000240 LINE CABINET WIRED CAPACITY: WIRED FOR 240 EQUIPPED CAPACITY: 120 POTS	08/10/01	$ 47,802	$ 14,113	$ 33,889

Location	Plant Loc. Code	Work Order	Work Order Description	Actual In-Svc	Summary TOTAL Dollars	Summary LABOR Dollars	Summary MATERIAL Dollars
Orofino	1250-132	3T001BK	REPL PRGN NEW HOPE ESA (UMC1000-120) UMC1000-240/120 - NARRATIVE: THIS PROJECT REPLACES A UMC1000/120 CABINET WITH A UMC1000/240 CABINET EQUIPPED WITH 120 CHANNELS AT NEW HOPE ESA. EQUIPMENT LOCATION & DSX ASSIGNMENTS EQUIP DESC / EQUIP PART # / EQUIP LOC B/S/P / DSX-1 B/S/P ===== ====== ========= ===== UMC1000/240 03200014 AFC240CH01 AFC240CH01 EQUIPPED FACILITY CAPACITY: 2 T1'S TYPE HOUSING: UMC1000240 LINE CABINET WIRED CAPACITY: WIRED FOR 240 EQUIPPED CAPACITY: 120 POTS	08/16/01	$ 44,798	$ 4,974	$ 34,922
Orofino	1250-131	3T001BM	REPL PRGN PECK GRADE ESA (UMC1000-48)UMC1000-120/66 - NARRATIVE: THIS PROJECT REPLACES A UMC1000/48 CABINET WITH A UMC1000/120 CABINET REMOVED FROM NEW HOPE ESA SITE. THE 120 CABINET WILL BE EQUIPPED WITH 66 LINES. EQUIPMENT LOCATION & DSX ASSIGNMENTS EQUIP DESC / EQUIP PART # / EQUIP LOC B/S/P / DSX-1 B/S/P ===== ====== ========= ===== UMC1000/120 03100464 AFC120H01R1 AFC120H01R1 TYPE FACILITY:(COPPER/FIBER/RADIO) FIBER EQUIPPED FACILITY CAPACITY: 1 DS3 TYPE HOUSING: UMC1000-120 WIRED CAPACITY: WIRED FOR 120 EQUIPPED CAPACITY: 66 POTS	11/27/01	$ 16,135	$ 9,746	$ 5,499

Location	Plant Loc. Code	Work Order	Work Order Description	Actual In-Svc	Summary TOTAL Dollars	Summary LABOR Dollars	Summary MATERIAL Dollars
Sandpoint	1350	3T001FF	ESTAB PRGN-SELKIRK ESA-UMC1000 672/162 - NARRATIVE: THIS PROJECT ESTABLISHES DIRECT INTERFACE ACCESS TO SANDPOINT CO. FOR THE SELKIRK ESA SITE. THE ESA SITE WILL BE COPPER FED FROM THE SUNNYSIDE HUT ON NEW FACILITIES WITH THE FACILITIES BETWEEN SANDPOINT AND THE SUNNYSIDE HUT PROVIDED BY EXISTING FIBER. EQUIPMENT LOCATION & DSX ASSIGNMENTS EQUIP DESC / EQUIP PART # / EQUIP LOC B/S/P / DSX-1 B/S/P ===== ====== ========= ===== UMC1000 PRI SH 0210-0117 314/19/01-16 210/10/1-16 THIS PROJECT WILL PLACE AN AFC UMC1000,PAD MOUNTED, CABINET WIRED FOR 672 CH AND EQUIPPED WITH 162 POTS. TYPE OF EQUIPMENT: AFC TYPE OF SPAN FACILITY: COPPER, REPEATERED T1'S TYPE OF HOUSING: PAD MOUNTED, UMC1000A CABINET WIRED CAPACITY: 672 EQUIPPED CAPACITY: 162 POTS	12/07/01	$ 21,120	$ 7,574	$ 13,547
Sandpoint	1350	3T001FK	ESTAB PRGN-SUNNY SHORES - UMC1000 240/120 - NARRATIVE: THIS PROJECT PLACES AN AFC UMC1000 LOCAL EXCHANGE TERMINAL (LET) IN SANDPOINT FOR DIRECT INTERFACE LINES FROM THE SUNNY SHORES ESA UMC1000 240 CABINET. EQUIPMENT LOCATION & DSX ASSIGNMENTS: EQUIP DESC / EQUIP PART # / EQUIP LOC B/S/P / DSX-1 B/S/P ===== ====== ========= ===== UMC1000 PRI SH 0210-0117 314/66/01-16 210/10/1-16 WESCOM RPTR SH B92031902 309/41/01-22 208/4/13-34 TYPE OF EQUIPMENT: AFC TYPE/QTY OF FACILITY: 2 COPPER T1'S TYPE OF HOUSING: 240 LINE, PAD MOUNTED WIRED CAPACITY: 240 TYPE/QTY OF SPECIAL CKT CARDS: ONE (1) T1AX; ONE (1) L-UVG	08/14/01	$ 42,639	$ 17,037	$ 25,602

Location	Plant Loc. Code	Work Order	Work Order Description	Actual In-Svc	Summary TOTAL Dollars	Summary LABOR Dollars	Summary MATERIAL Dollars
Coeur d'Alene	1440	3T001EC	ADD ACCESS NODE FCOT - C.O. - NARRATIVE: THIS PROJECT IS THE CO END OF THE RIVERSTONE ESA . DISC#S ADD. ADDS (1) FLM150 FIBER MUX. EQUIPMENT LOCATION & DSX ASSIGNMENTS	09/29/01	$ 20,941	$ 3,884	$ 17,093

EQUIP DESC	EQUIP PART #	EQUIP LOC B/S/GRP	DSX-1 B/PNL/JKS
FUJITSU OC-3	FLM-150	T-710/17/4	DSX-11/61/29-56
FUJITSU OC-3	FLM-150	T-710/17/5	DSX-11/61/57-84 W/O
FUJITSU OC-3	FLM-150	T-710/17/6	DSX-11/61/85-112 W/O

Bonners Ferry	1010	3P001GN	REPLACES 330 CHANNELS OF 82A CARRIER IN THE NORTH END OF THE BONNERS FERRY EXCHANGE, WITH GO-DIGITAL CARRIER	09/06/01	$ 13,987	$ 10,452	$ 4,834
Bonners Ferry	1010	3T001CN	ESTAB PRGN- KINGS ROW ESA-UMC1000 240/120 - NARRATIVE: THIS PROJECT ESTABLISHES TWO UMC1000 COTTED CBA SHELVES IN THE BONNERS FERRY CENTRAL OFFICE TO SUPPORT THE ESTABLISHMENT OF A NEW UMC1000 RSC/240 CABINET AT THE KINGS ROW ESA SITE. THE UMC1000 CBA SHELVES WILL BE EQUIPPED WITH 120 L-POTS LINES. THE ESA SITE WILL BE COPPER FED TO THE BONNERS FERRY CENTRAL OFFICE. EQUIPMENT LOCATION & DSX ASSIGNMENTS	11/30/01	$ 30,347	$ 10,351	$ 21,083

EQUIP DESC	EQUIP PART #	EQUIP LOC B/S/P	DSX-1 B/S/P
UMC1000 CBA SH	0210-0116	305/33	N/A
UMC1000 CBA SH	0210-0116	305/37	N/A

Location	Plant Loc. Code	Work Order	Work Order Description	Actual In-Svc	Summary TOTAL Dollars	Summary LABOR Dollars	Summary MATERIAL Dollars
Bonners Ferry	1010-229	3T001CP	ESTAB PRGN- KINGS ROW ESA-UMC1000 240/120 - NARRATIVE: THIS PROJECT PLACES AND AFC UMC1000 RSC/240 CABINET AT THE KINGS ROW ESA SITE. THE CABINET WILL BE WIRED FOR 240 LINES AND EQUIPPED WITH 120 R-POTS LINES. THE UMC1000 RSC/240 WILL BE COTTED AT THE BONNERS FERRY CENTRAL OFFICE. THE CABINET WILL BE COPPER FED FROM THE BONNERS FERRY CENTRAL OFFICE. EQUIPMENT LOCATION & DSX ASSIGNMENTS EQUIP DESC / EQUIP PART # / EQUIP LOC B/S/P / DSX-1 B/S/P UMC1000 CAB 0320-0832 AFC240H01 FACTORY WIRED	11/30/01	$ 54,224	$ 8,402	$ 38,558
Moscow	1220	3F001CS	ANALOG REPLACEMENT - LENVILLE RD - PROVIDE THE REMOTE UNITS FOR 4 SYSTEMS OF GO-DIGITAL SUBSCRIBER CARRIER. THIS PROJECT WILL REPLACE ABOUT 20,000' OF AIR-CORE CABLE, WHICH IS NECESSARY IN ORDER TO PROVIDE SPANS FOR NEW CONKLIN CHANNELS, WHICH WILL REPLACE THE EXISTING CM8.	09/28/01	$ 103,671	$ 73,156	$ 29,660
Moscow	1220-199	3T001DV	ESTB ESA - BLAINE RD - UMC120 - RMT - NARRATIVE: THIS PROJECT PROVIDES FOR THE ESTABLISHMENT OF A UMC1000/120AX CABINET AT THE BLAINE ROAD REMOTE ESA SITE. THE SYSTEM WILL BE WIRED FOR 120 LINES AND EQUIPPED WITH 60 R-POTS LINES. THE SYSTEM WILL DI TR303 TO THE MOSCOW GTD-5. EQUIPMENT LOCATION & DSX ASSIGNMENTS EQUIP DESC / EQUIP PART # / EQUIP LOC B/S/P / DSX-1 B/S/P UMC1000/120AX 03200830 AFC120H01 N/A	08/08/01	$ 44,128	$ 14,362	$ 25,793

Location	Plant Loc. Code	Work Order	Work Order Description	Actual In-Svc	Summary TOTAL Dollars	Summary LABOR Dollars	Summary MATERIAL Dollars
St.Maries	1340	3T001BB	ESTB PRGN - UMC 1000 - FLAT CREEK ESA - C.O. - NARRATIVE: THIS PROJECT PLACES A COTTED AFC UMC1000 LOCAL EXCHANGE TERMINAL (LET) IN THE ST. MARIES C.O. EQUIPPED WITH 150 POTS CHANNELS. EQUIPMENT LOCATION & DSX ASSIGNMENTS EQUIP DESC / EQUIP PART # / EQUIP LOC B/S/P / DSX-1 B/S/P ===== ====== ========= ===== UMC1000 02100126 608/25 503/05/54-55 LN TERM SH B92031902 502/21 503/05/32-53	10/10/01	$ 56,145	$ 13,201	$ 45,028
St.Maries	1340-237	3T001BG	ESTB PRGN - UMC 1000 - FLAT CREEK ESA - RMT. - NARRATIVE: THIS PROJECT PLACES A COPPER FED, PAD MOUNTED UMC1000-240 CABINET, WITH INTERNAL CROSS CONNECT AT THE FLAT CREEK ESA. IT WILL BE WIRED FOR 240 LINES AND EQUIPPED WITH 150 POTS LINES. EQUIPMENT LOCATION & DSX ASSIGNMENTS EQUIP DESC / EQUIP PART # / EQUIP LOC B/S/P / DSX-1 B/S/P ===== ====== ========= ===== UMC1000 CAB 0320-0832 AFC240H01 FACTORY WIRED	10/10/01	$ 64,493	$ 15,763	$ 44,452

Location	Plant Loc. Code	Work Order	Work Order Description	Actual In-Svc	Summary TOTAL Dollars	Summary LABOR Dollars	Summary MATERIAL Dollars
Pinehurst	1870-173	3T001BA	ESTB ESA - BUMBLEBEE - UMC120 - RMT - NARRATIVE: THIS PROJECT PROVIDES FOR THE ESTABLISHMENT OF A UMC1000/ 120 CABINET AT THE BUMBLEBEE ESA SITE. THE SYSTEM WILL BE WIRED FOR 120 LINES AND EQUIPPED WITH 66 R-POTS LINES. THE RSC/120 WILL BE COTTED AT THE PINEHURST CENTRAL OFFICE. THE CABINET WILL BE COPPER FED FROM THE PINEHURST CENTRAL OFFICE ON CABLE C4: XMT PAIRS 30 & 31 AND RCV PAIRS 5 & 6. EQUIPMENT LOCATION & DSX ASSIGNMENTS EQUIP DESC / EQUIP PART # / EQUIP LOC B/S/P / DSX-1 B/S/P ===== ====== ========= ===== UMC1000/120 0320-0830 AFC120H01 FACTORY WIRED	11/07/01	$ 32,465	$ 4,939	$ 27,526
Genesee	1110	3T001AK	ADD GDSL SHELF - GENESEE C.O. - THIS PROJECT IS REQUIRED TO PROVIDE FACILITIES FOR ANTICIPATED GROWTH IN LONG RURAL LOOPS. THIS PROJECT IS AN ALTERNATIVE TO PLACING LONG SECTIONS OF COARSE GAUGE CABLE, OR ESTABLISHING DLC'S IN VERY REMOTE AND/OR LOW GROWTH AREAS.	06/06/01	$ 9,240	$ 5,043	$ 4,903
Bonners Ferry	1010	3T001CQ	ADD GO-DIGITAL - BONNERS FERRY C.O. - THIS PROJECT PLACES ONE (1) GODIGITAL SHELF IN THE BONNERS FERRY, ID CENTRAL OFFICE, ALONG WITH THE ASSOCIATED COMMON EQUIPMENT AND C.O. LINE UNITS FOR 5 SYSTEMS AND SPARES. TYPE OF EQUIPMENT: GODIGITAL CAPACITY: WIRED FOR 16 SYSTEMS MAT CODE: 587610 QTY: 1 DESCR: 19" GODIGITAL SHELF MAT CODE: 538602 QTY: 2 DESCR: ALARM/POWER CARD (1 + 1 SPARE) MAT CODE: 698083 QTY: 6 DESCR: COT LINE UNIT (5+1 SPARE)	05/22/01	$ 12,473	$ 4,399	$ 8,075

Location	Plant Loc. Code	Work Order	Work Order Description	Actual In-Svc	Summary TOTAL Dollars	Summary LABOR Dollars	Summary MATERIAL Dollars
TOTAL					$ 1,150,506	$ 346,872	$ 816,718

Broadband Tax Credit
State of Idaho - 2001

Verizon Northwest

Network Diagram

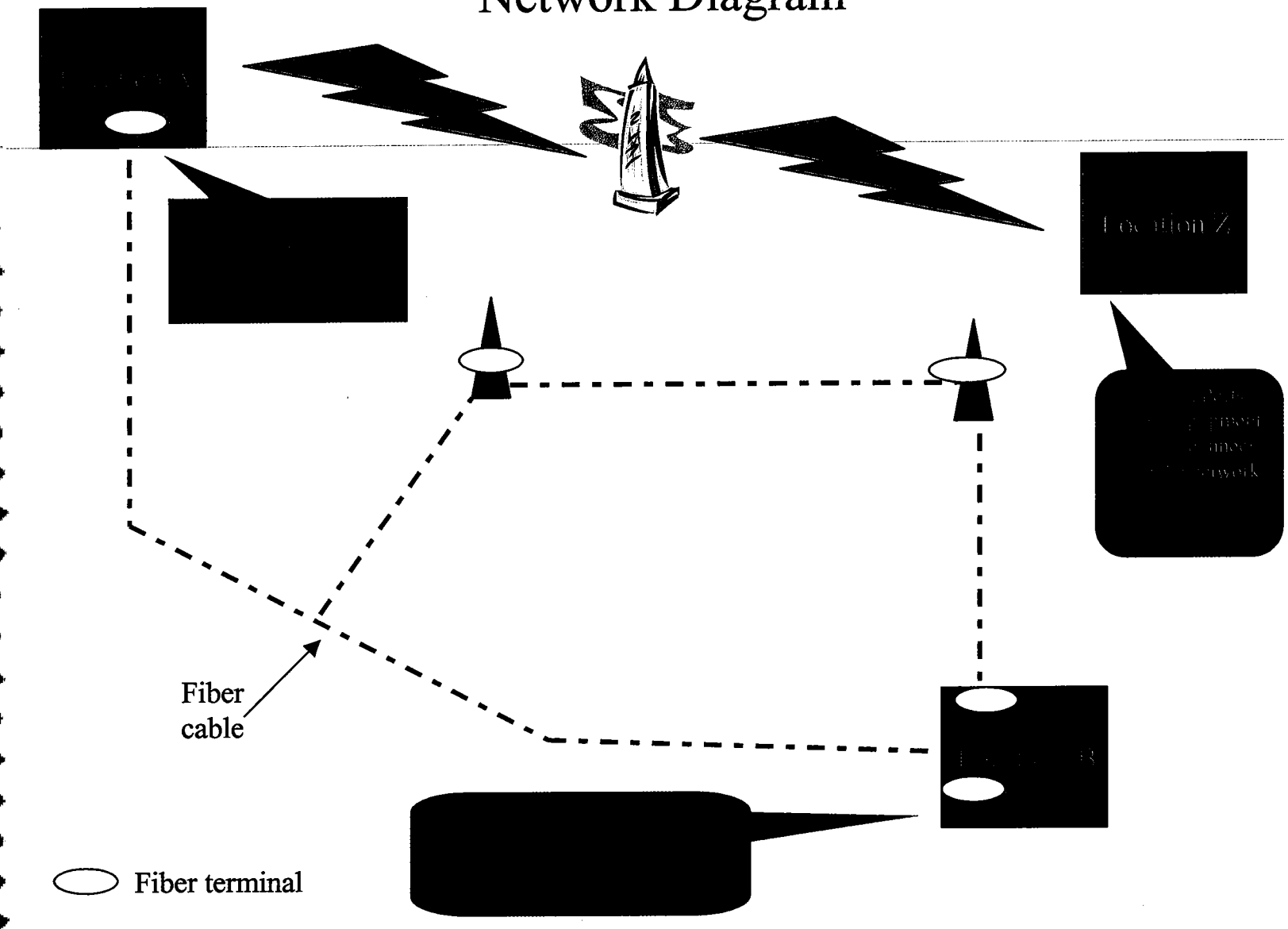

Ports are place on the ILEC switch, providing

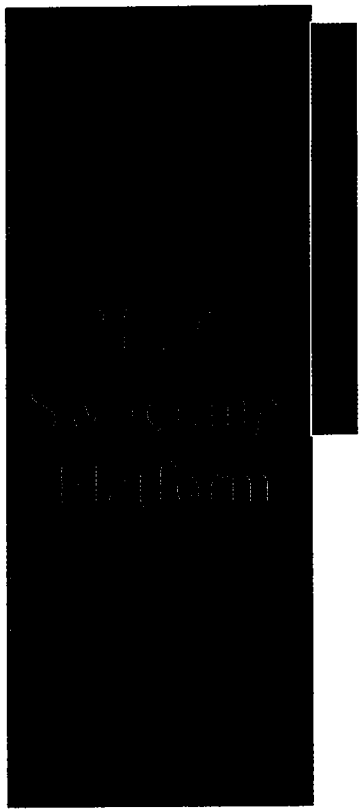

Ports serve as the interface for equipment being attached to the switch. Without ports the broadband equipment placed in the Central office would not be able to interface with the local switch and be handed off as required.

Ports allow remote office equipment like digital loop carriers to be directly connected to the switch, this allows for increase transmission speed due to reduce conversions from analog to digital.

Fiber terminals are placed on each end of the fiber to perform the light to digital conversion.

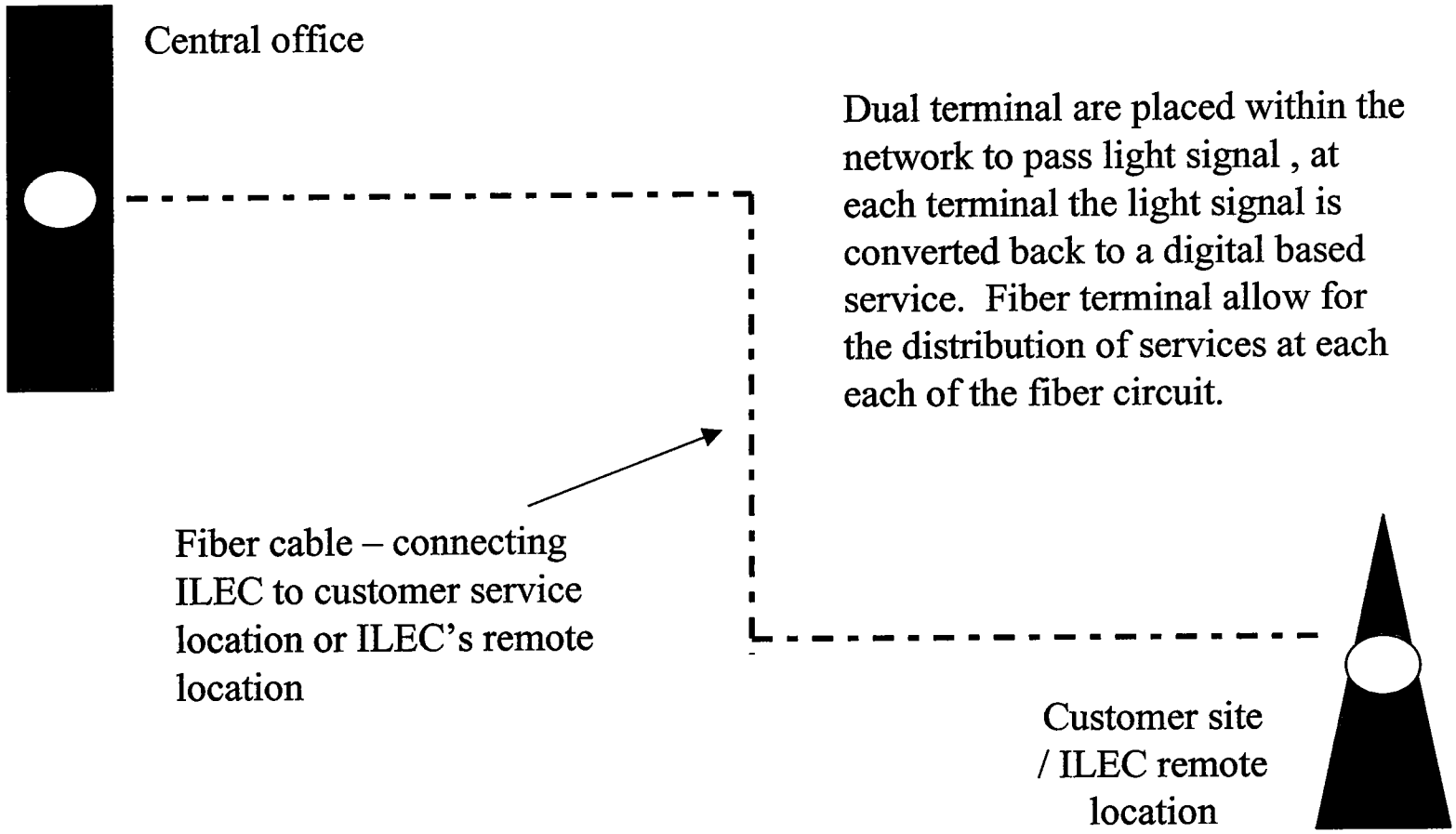

Radio Equipment allows for transmission of traffic via air waves where a physical path of copper or fiber cable does not existing.

Radio is the primary means of interconnection for some offices and remote locations. All broadband services at those site require the radio to interface

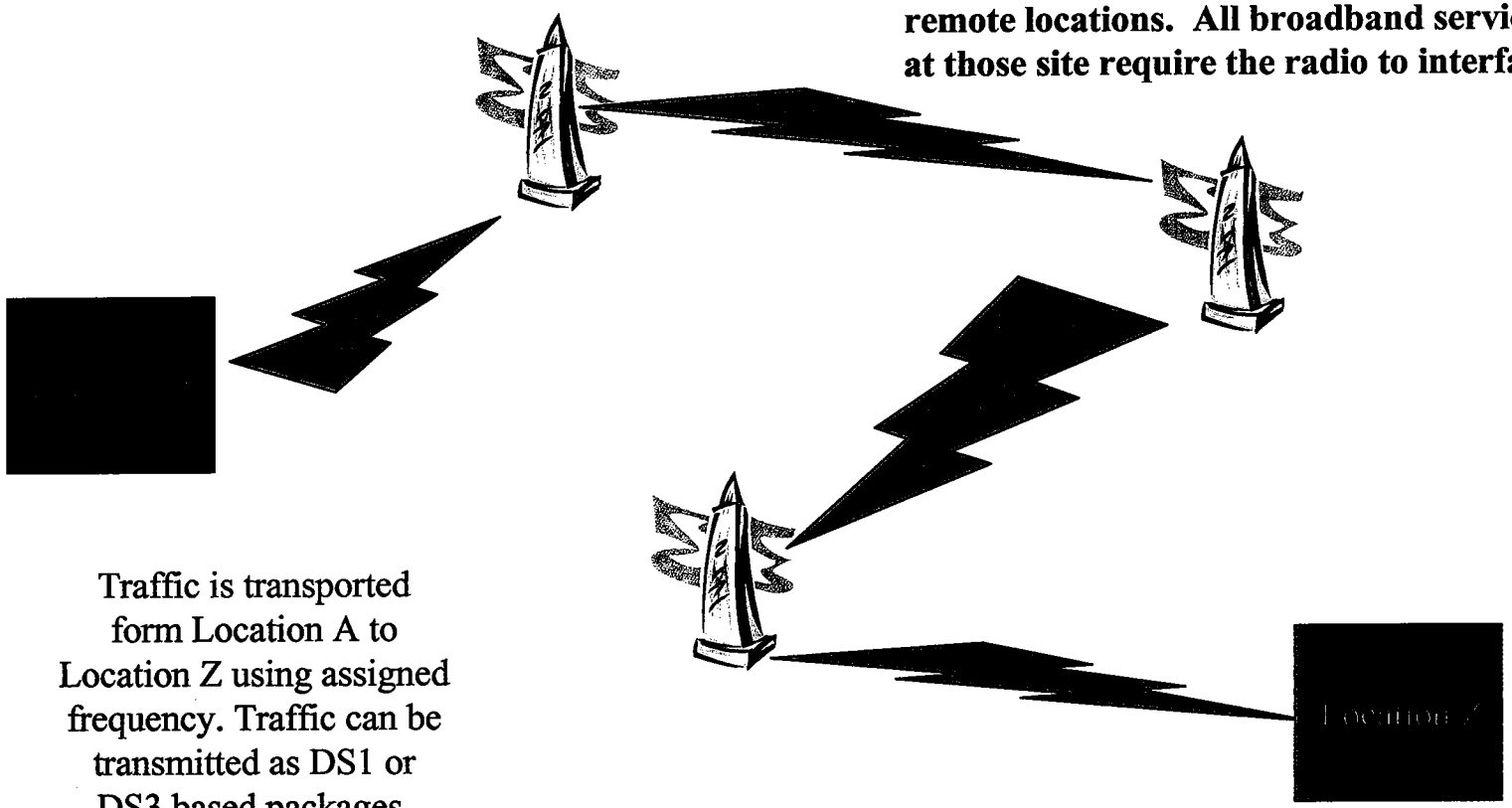

Traffic is transported form Location A to Location Z using assigned frequency. Traffic can be transmitted as DS1 or DS3 based packages.

Broadband Tax Credit
Idaho - 2001

- Describe why radio equipment needs to be included in broadband investment. Could customers have broadband service without that tower to tower leap ?
  - The radio equipment identified serves as the primary service link to those offices, this serves as the interconnect medium to interface with the other service providers. Without the radio links the customers would not be able to connect with the other terminating end of their broadband services.

Broadband Tax Credit
Idaho - 2001

- Inter-office facilities : again, justify why the upgraded post falls to CDA routes being upgraded (7F001BP) is necessary for broadband services .

  This route is presently support with radio, all bandwidth has been assigned on the existing radio.Customers broadband request cannot be provisioned with route relief. Based on growing customer requirements, including state of Idaho projects fiber is being placed to replace the radio path. New fiber will increase the is route bandwidth and provision customer demand requirements.

  You are correct work order 1040-7F001BP was a duplicate, spreadsheet has been updated.

4. State the network transmission rate in bits per second at which the subscribers to the relevant broadband services can receive and send

OCx - Optical Carrier specification used in ATM/SONET the 'x' represents a multiple of 51.84Mbps transmission (OC3 = 3 x 51.84 Mbpx, OC24 = 24 x 51.84 Mbps). **Mbps** - 1,000,000 bits/sec

ISDN-BRI - Integrated Services Digital Network - Basic Rate Interface. The data rate is typically 144 Kbps with two (2) B-channels to carry voice/data traffic and one (1) D-channel for signaling.

ISDN-PRI - Integrated Services Digital Network - Primary Rate Interface. The data rate is 1.544 Mbps and provides 23 B-channels to carry voice/data traffic and one (1) D-channel for signaling.

DSL - Digital Subscriber Line - is a communication technology that uses existing twisted-pair telephone lines to transport high-bandwidth data, such as Internet, multimedia, and video. SDSL and ADSL are the two varieties of DSL services. ADSL is drawing significant attention from service providers because it promises to deliver high-bandwidth data rates to dispersed locations with relatively small changes to the existing telephone company infrastructure at a reasonable cost. Download speeds can range from 128 Kbps to 6 Mbps from the service providers and up to 128Kbps "upstream" (information traveling from the subscriber to the central office).

SONET - Synchronous Optical Network is designed to take advantage of high-speed transmission rates available with fiber. SONET is expected to eventually take the place of T-carrier facilities as the next generation of high speed time-division multiplexing. SONET speeds start as low as OC-1 (51.84 Mbps) to OC-48 (2.488 Gbps) and beyond. SONETs are generally designed as a closed loop 'ring' and are self-healing, if a break in fiber occurs, the transmissions are automatically rerouted back through the non-damaged portion of the network. SONET has redundancy built into its architecture.

8. Quantify the percentage and number of potential Idaho customers that could be served with the Broadband equipment and the percentage and number of non-Idaho subscribers that will be/could be served by the broadband network.

	Total Idaho Customer Lines	Percentage * Qualifying	Non Idaho Customer Lines
Bayview	2602	100%	0
Bonners Ferry	5524	100%	0
Coeur D'Alene	31937	100%	0
Hayden Lake	12275	100%	0
Kellogg	2515	100%	0
Moscow	19373	100%	0
Orofino	4066	100%	0
Pinehurst	2431	100%	0
Sandpoint	18005	100%	0
St. Maries	4366	100%	0
Total	103094	100%	0

* DSL is a distance sensitive technology that works over copper phone lines. Verizon DSL is only available to customers residing within 3 wire run miles (up to 18,000 feet) from their Verizon central office. Some wires are capable of handling DSL and others are not, even in the same area.